K 60 D 063 Z

AQUASET CONTROL UNIT

APPLICATIONS :

- **1 Floor Zone**
- **2 Floor Zones**
- **2 Mixed Zones (Floor + Terminal Units)**
- **1 Terminal Units Zone**

MARKING CE

This product, marked with the CE symbol, complies with the essential requirements of the following Directives:

- Low voltage No. 73/23 EEC, modified 93/68 EEC.
- Electromagnetic Compatibility No. 89/336 EEC, modified 92/31 and 93/68 EEC.

CONTENTS

1 - Purpose - Use 2
2 - Control unit description 2
3 - Installation 3
4 - Precautions 3
5 - Control operating principle 3
6 - Presentation of control elements 4
7 - 1-zone floor application operation 6
8 - 2-zone floor application operation 11
9 - Mixed 2-zone application operation 17
10 - 1 zone operation, terminal units 23
11 - Telephone control 27

1 - PURPOSE - USE

- This control unit is designed for use on water distribution type air-conditioning installations, exclusively within the scope of AQUASET systems for the following applications:
  - 1 zone, floor heating / cooling.
  - 2 zones, floor heating / cooling.
  - 2 zones, mixed floor + terminal units.
  - 1 zone, terminal units.

2 - CONTROL UNIT DESCRIPTION

- Plastic wall-mounted control unit.
- Dimensions: height = 128 mm
  width = 86 mm
  depth = 34 mm
- Colour: White
- Class III
- IP 30.

3 - INSTALLATION

- As the control unit is equipped with a temperature sensor, it must be installed in a location that is representative of the temperature in zone 1.
- **Note:** For 2-zone applications, an ambient temperature sensor (zone 1) (accessory) can be connected on the **M2Z** thus doing away with the need to install the control unit in zone 1.
- Wall mounting: the unit must not be installed in corners, on shelves or behind curtains, near sources or heat or directly exposed to sunlight. The unit should be installed approximately 1.5 m above the floor.
- Open the box by removing the lower screw and secure the base to the wall (mounting holes, item **1**).
- Open the protective cover (screw **2**) and connect the BUS link to the control board (refer to the **MC8/10** installation manual).

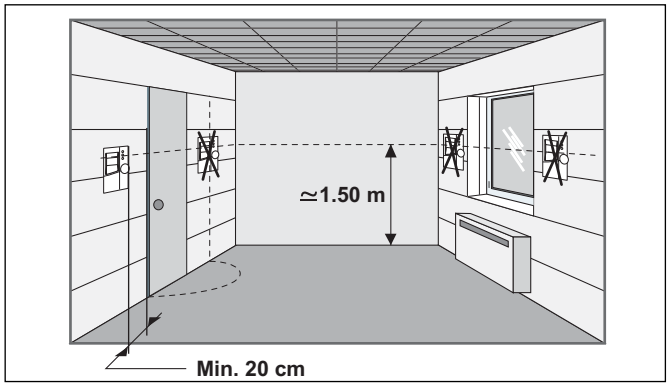

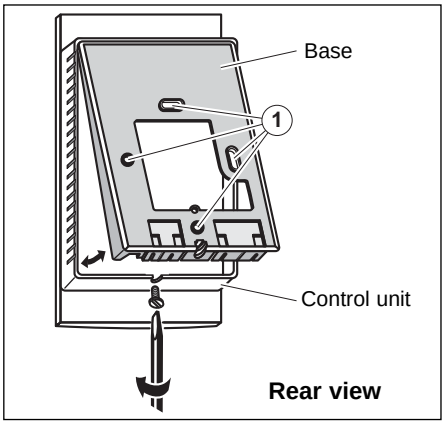

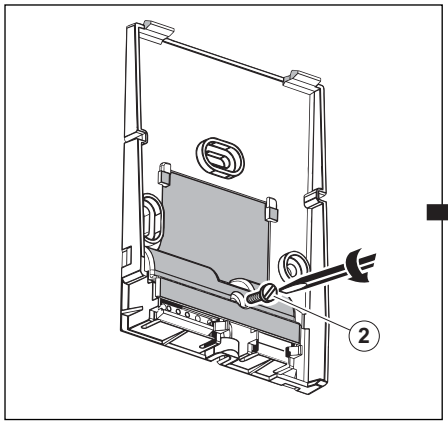

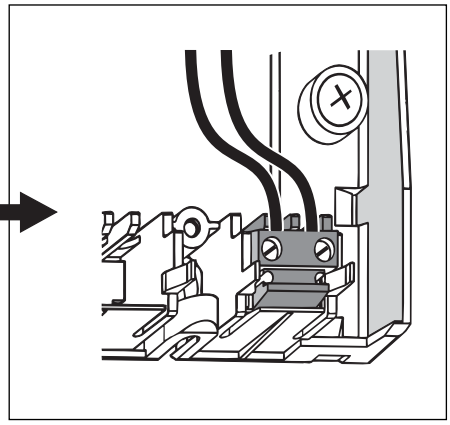

- Fit the control unit back on its base.

4 - PRECAUTIONS

IMPORTANT

Before doing any work on the installation, make sure it is switched off and the power supply locked out.
All maintenance / servicing must be performed by qualified personnel.

- Consult the installation manuals of the system's various components:
  - **PHR(T)** generator.
  - **MC8/10** electric heating module.
  - 2-zone module (for 2 floor or mixed zone applications) **M2Z P** and **M2Z M**.
- Also consult the control unit's user's manual.

5 - CONTROL OPERATING PRINCIPLE

- The electrical control assembly enables a complete installation to be controlled from a configurable and parameterable control unit, depending on the type and conditions of the installation.
- The orders given by the control unit are transmitted (via a 2-wire BUS) to the various elements of the installation via:
  - the heating control board (located in the **MC8/10**) which controls the **PHR(T)** generator and the supplementary electric heating of the **MC8/10**,
  - zone boards, if any, which control the **M2Z** 2-zone modules.

- The control unit's rotating knob is used to select the desired operating mode:
  - **Heating**:
    The generator and any supplementary electric heating are controlled in relation to a setpoint resulting from the water temperature calculated according to a water rule (according to the outside temperature).
  - **Cooling**:
    The generator is controlled according to its setpoint (based on the ambient temperature for floor applications).

6 - PRESENTATION OF CONTROL ELEMENTS

6.1 - CONTROL UNIT

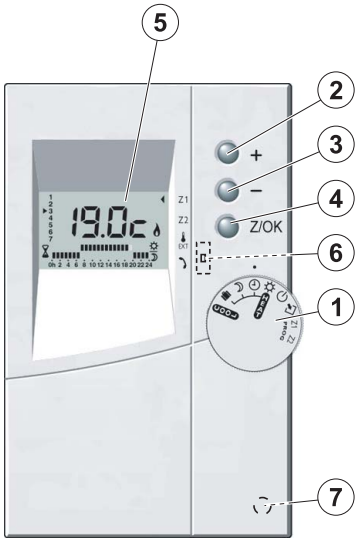

(1) Rotary function selection knob (9 positions, left to right):

COOL - **Cooling**: Operation in cooling mode

HEAT
- **Heating, anti-freeze**: **Anti-freeze** mode operation
- **Heating, ECO**: Heating mode operation with **ECO** setting
- **Heating, Auto**: Heating mode operation with hourly programming
- **Heating**: Heating mode operation with **Comfort** setting

- **Stop**
- **Time setting**
- Z1 - **Prog. Z1**: Zone 1 program control (hourly / weekly)
- Z2 - **Prog. Z2**: Zone 2 program control (hourly / weekly)

(2) Push-button ⊕ for setpoint and parameter modification

(3) Push-button ⊖ for setpoint and parameter modification

(4) "**Z/OK**" push-button Display selection zone 1 / zone 2 / outside temperature and validation

(5) Liquid crystal display (LCD)

(6) Micro-switch to activate a 2nd heating zone using electric convectors (for 1 zone floor or 1 zone terminal unit applications).
This micro-switch is located on the back of the unit's printed circuit board. Remove the base to gain access to this switch.

(7) Ambient temperature sensor

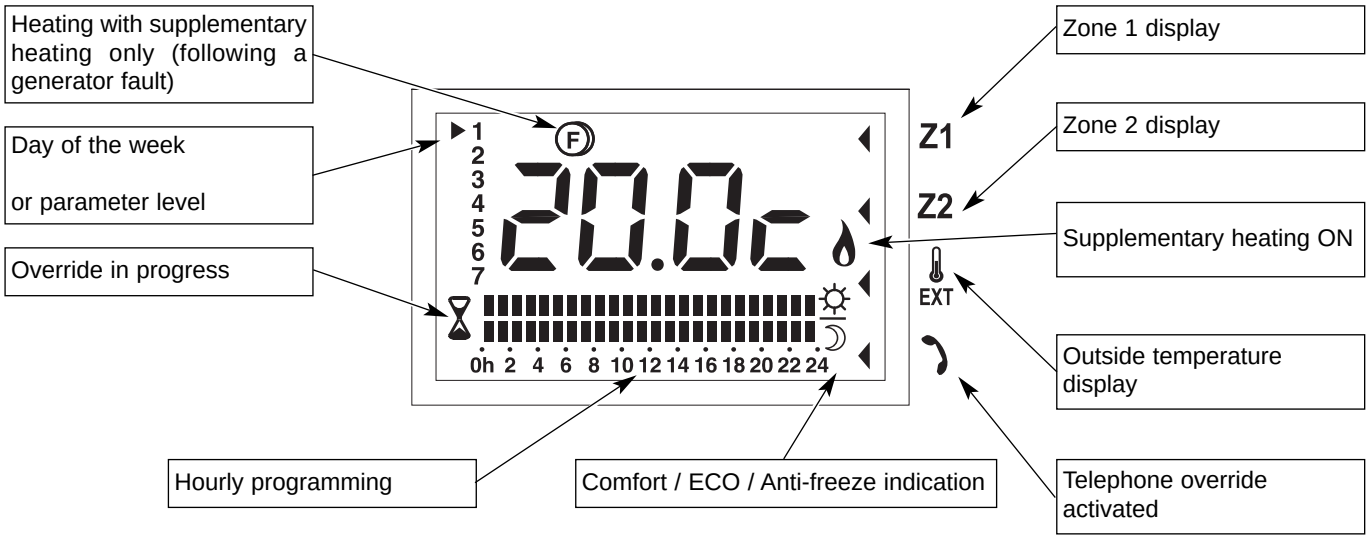

- When off, the display indicates "**OFF**".
- When in operation, the normal reference display indicates:
  - the setpoint temperature of zone 1 (for a floor zone),
  - the current setting with the hourly program bar graph:

☼ = **Comfort**

☽ = **ECO**

No indication = **Anti-freeze** (prolonged absence)

  - current day.

Note:

In the case of a 2nd zone with electric convectors or terminal units, there is no centralized setpoint or ambient temperature measurement. The display indicates "HEAT" (or "COOL" in cooling mode for the terminal units).

6.2 - HEATING BOARD

- Mounted in the **MC8/10**, it enables control of the **PHR(T)** generator and the **MC8/10**'s supplementary electric heating.
- It is connected to the control unit by the communication BUS.

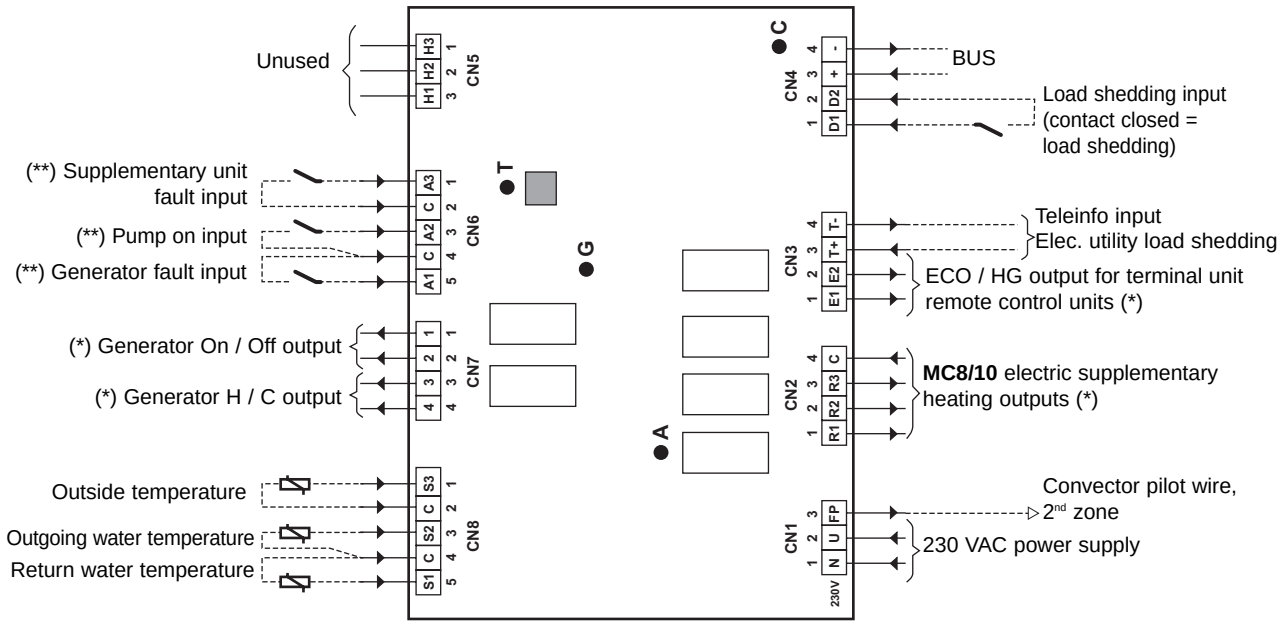

A = Supplementary unit control Led
G = Generator control LED
C = Communication BUS LED
T = Elec. utility load shedding teleinfo LED (flashing if not connected or out of order)

(*) Potential-free, normally-open contact
(**) Fault on contact opening

6.3 - ZONE BOARD

- Mounted in **M2Z** 2-zone modules, it is designed to control the circulating pump and control valve for each zone.
- There is one board per zone.
- It is connected to the control unit and to the heating board by the communication bus.

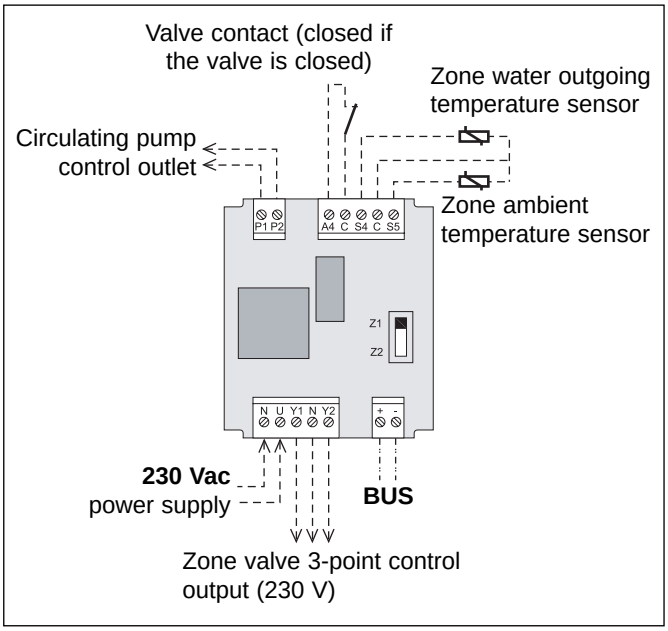

6.4 - TEMPERATURE SENSORS

- Type CTN 10 KΩ at 25 °C.

Temperature (°C)	Ohmic value (Ohm)
-20	97 120
-15	72 980
-10	55 340
-5	42 340
0	32 660
5	25 400
10	19 900
15	15 710
20	12 490
25	**10 000**
30	8 058
35	6 532
40	5 326
45	4 368
50	3 502
55	2 936
60	2 488
65	2 082
70	1 751

6.5 - POWER FAILURE

- In case of power failure, the parameters and settings are maintained. If the power outage exceeds 6 hours, the time setting will have to be corrected.

7 - 1-ZONE FLOOR APPLICATION OPERATION

• The operating modes are selected using the rotary knob on the front of the control unit (see chapter 6.1 and user's manual).

7.1 - HEATING MODE

7.1.1 - HEATING OPERATING DIAGRAM

An outside temperature **X** determines a resulting water temperature setpoint **Y**.

The parameters determining this water rule can be set by the installer (see the table in paragraph 7.6).

The resulting setpoint is displayed at parameter 4.
It can be corrected as required depending on the ambient temperature of the zone.

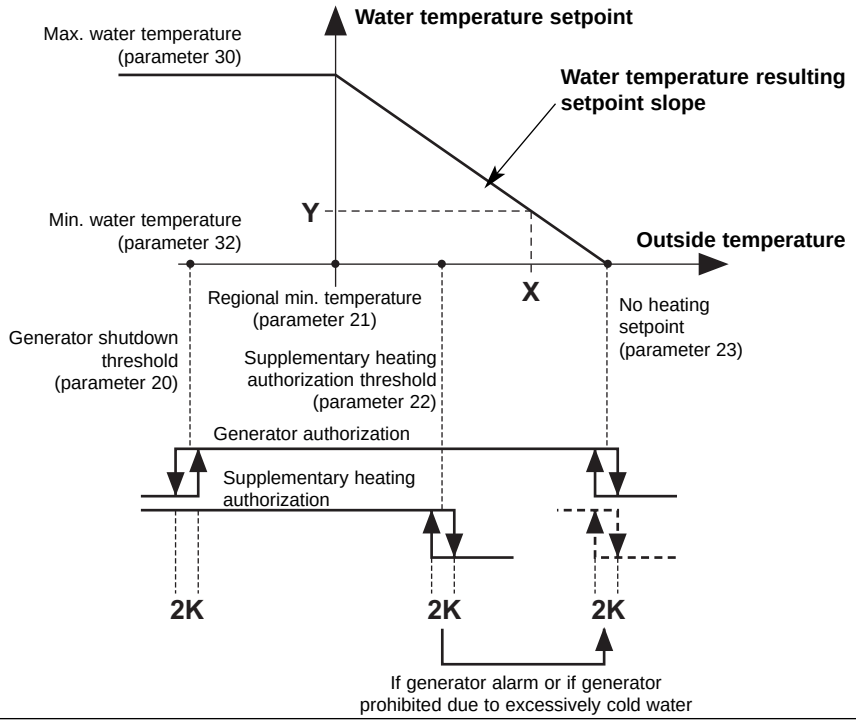

7.1.2 - "COMFORT" HEATING MODE ☼

• **Temperature setpoint**
- The generator can operate only if the outside temperature is less than the non-heating temperature.
- The generator is controlled via the heating board according to a **resulting setpoint** of the water temperature (installation return) calculated according to an adjustable water rule determined by:
  - the non-heating temperature (parameter 23),
  - the regional minimum temperature (parameter 21),
  - the minimum temperature of the water circuit (parameter 32),
  - the maximum temperature of the water circuit (parameter 30).

The resulting setpoint calculated in this manner can be corrected by the temperature of the zone:
A difference of +/- 1 degree of ambient temperature in relation to the heating setpoint temperature of the zone (adjustable from 15 to 25 °C) causes the resulting setpoint (water temperature) to decrease or increase of 2 degrees, respectively. However, this variation cannot exceed +/- 4 degrees.
Note:
The PHR(T) generator's heating setpoint value must be greater than or equal to the maximum value of the resulting setpoint.

• **Supplementary electric heating**
- The heating elements are actuated if the generator is not able to maintain the water return temperature at the calculated value. The supplementary heating by electrical heating elements is staged (2 stages). Tiering is managed by a 10-minute time delay for the 2nd.
- **Caution**:
  During normal operation, the supplementary heating is authorized only if the outside temperature falls below the authorization threshold (parameter 22) corresponding to the installation's equilibrium temperature and the absence of a load shedding signal. However, if can be authorized for greater temperatures if the generator is experiencing an alarm or if generator operation is prohibited by a safety device (and even if a load shedding signal is present).
  Supplementary heating is prohibited if it is experiencing an alarm.

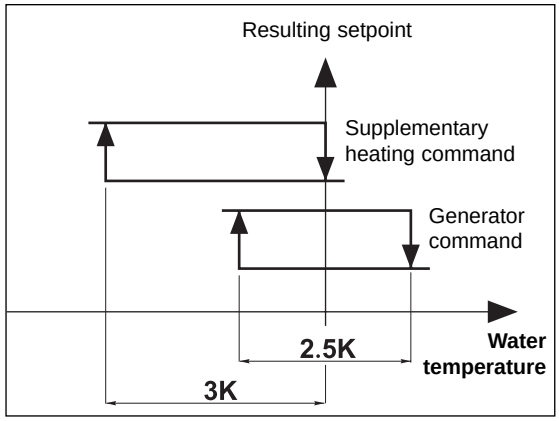

- **Generator operating safety features in heating mode**
  - A safety device on the water temperature (installation return) prohibits generator operation if this temperature is below the thermodynamic heating authorization threshold (parameter 36). In this case, only supplementary heating is authorized to raise the water temperature and allow the generator to operate, regardless of the outside temperature (load shedding is thus inoperative). The activation of this safety feature is indicated by the flashing of the display.
  - Generator operation is prohibited if the outside temperature is below the generator's shut-off threshold (parameter 20). Only supplementary heating is authorized (load shedding is thus inoperative).

7.1.3 - "ECONOMY" HEATING MODE ☽

- The switch to "**ECO**" mode lowers the ambient temperature setpoint by a value than can be adjusted from 1 to 4K (parameter 24).
- It can only be activated in heating mode (inactive in cooling mode).
- Switching from "**Comfort**" to "**ECO**" is accomplished either by hourly programming, weekly programming by zone or by actuating the rotary knob for the entire installation.
- In the case of hourly programming, the user can activate a temporary override (1 hour + periods of 1 hour during the current day) per zone.

7.1.4 - "ANTI-FREEZE" HEATING MODE (prolonged absence)

- Selection is made using the rotary knob on the control unit for the entire installation.
- The water temperature resulting setpoint passes to an adjustable value (parameter 29 is factory-set at 25°C). Heating (generator + supplementary heating, if any) is actuated depending on the ambient temperature setpoint of 12 °C.

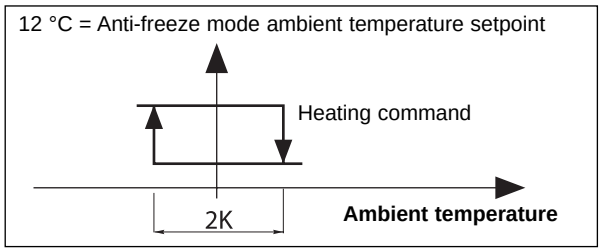

7.2 - COOLING MODE

- Selection is made using the rotary knob on the control unit.
- **Temperature setpoint**
  - The generator operates with its own water temperature setpoint (recommended setting: 22 °C installation return). It is recommended if the ambient temperature is greater than the cooling setpoint (adjustable from 20 to 30 °C). However, the generator is stopped if the installation's return water temperature is below the minimum water temperature (parameter 34).

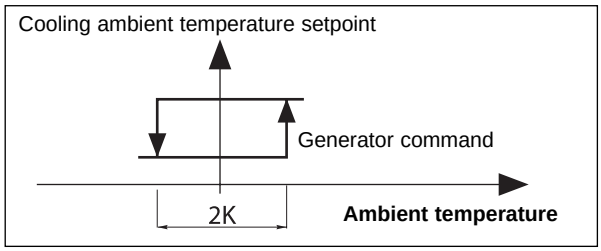

- **Generator operating safety features in cooling mode**
  - Generator operation is prohibited if the installation return water temperature is above a threshold (parameter 35). The activation of this safety feature is indicated by the flashing of the display.
  - An "anti-condensation" device on the installation's outgoing temperature prohibits generator operation if this temperature is below 15 °C. This device is designed to limit the risks of condensation.

7.3 - FLOWRATE MEASUREMENT

- Through special action of parameter 41, a flowrate measurement sequence can be launched calculated with the water temperature difference between the outlet and the return following forced operation of the heating elements for 240 seconds. During this period, generator operation is prohibited. The flowrate is displayed at the end of this period. During the measurement operation, the alarms remain active (and notably the supplementary heating fault and water pump slaving). This operation can only be performed with installation shut down "**OFF**" and by a qualified technician.
- Procedure:
  - Ensure that the installation is ready to operate and notably that **water is circulating** and that the circuit has been purged.
  - Go to parameter 40 and enter **the total electric heating power** (7.5 kW by default).
  - Go to parameter 41.
    Note:
    If this parameter is set in other than the "**Stop**" position, the word "**STOP**" is displayed and the calculation cannot be launched.
  - Press and hold the "**OK**" button for 5 seconds to launch the measurement.
  - The countdown display flashes.
  - When the countdown is completed, the flowrate is displayed (in m^3/h).
  - Exit the parameters to reinitialise this function.

  If a fault appears during the countdown, the sequence is stopped immediately and the heating elements are disconnected. The display automatically exits the parameter menu.
- **Note**: The value displayed is only an indication; a more precise result requires the appropriate measuring equipment.

7.4 - 2nd ZONE - ELECTRIC CONVECTORS

- A 2nd zone equipped with electric convectors can also be managed (Max. number = 20). These appliances must be equipped with an electronic thermostat (not included) able to receive signals via a 230 VAC pilot wire (standard GIFAM 4).
- The 2nd zone is activated by setting the microswitch in the back of the control unit to the "**ON**" position.
  - In "**Comfort**", "**ECO**" or "**Anti-freeze**" heating modes, the corresponding signals are transmitted to the 2nd zone.
  - In **cooling** mode and in the **Stop** position, the shut-down signal is transmitted to the 2nd zone.
  - In **heating mode with hourly programming**, the "**Comfort**" or "**ECO**" signals are transmitted to the 2nd zone according to the corresponding hourly programming.
    Note:
    In case of load shedding, a shut-down signal is transmitted to the 2nd zone.
  - In heating mode, the display unit indicates for the zone 2 "**HEAT**".

7.5 - MISCELLANEOUS

- Mode changes using the rotary knob (**Heating / Cooling / Anti-freeze / Stop**) are delayed 10 seconds in order to filter inappropriate actions. However, the "**Time Setting**" and "**Hourly Programming**" positions do not have the time delay feature.
- The authorization thresholds on the water temperature are cut-off values with a differential of 1K for the reset.

7.6 - PARAMETERS

- **General**
  - 2 access levels:
    - Level 1, read only, with direct access for parameters 1 to 19,
    - Level 2, ("technical level") accessible by password ("**1958**"). This level is entered via parameter 20, although all parameters are accessible.
      Refer to the procedure in the user's manual.
  - Pressing and holding the "**OK**" button enables you to exit a parameter and return to the normal display.
    In all cases (except for the flowrate calculation), the display returns to normal automatically after 2 minutes if no buttons are pressed for level 1 and after 15 minutes for level 2.
  - The parameters can be accessed and modified both in operation and when shut down, except for those for the flowrate calculation, installation configuration and default configuration which can only be accessed and modified when the installation is shut down.
    Note:
    The flashing parameter values are those that can be modified. Otherwise, the display remains steady.
- **Default configuration**
  - This enables the default values (see list) of all parameters to be reset according to the type of installation.
  - Procedure:
    - Set the rotary knob on the control unit to the "**Stop**" position.
    - Go to parameter 60. Press the "**Z/OK**" button; the "**init**" message is displayed.
      Note:
      If this parameter is set in other than the "**Stop**" position, the word "**STOP**" flashes and the configuration cannot be launched.
    - Press and hold the "**Z/OK**" button for 5 seconds to launch the default configuration. The "**init**" message flashes. When initialisation is completed, the display returns to parameter 60.
- **Configuration of installation type**
  The following elements must be verified each time the installation is placed into service.
  - **For the 1 zone, floor application, parameter 70 must be set to 1.**
  - Procedure:
    - Set the rotary knob on the control unit to the "**Stop**" position.
    - Go to parameter 70. Press the "**Z/OK**" button; the value of the parameter is displayed. This value may be read or modified using the **+** and **–** buttons if the system is in the "**Stop**" position. If parameters are modified, an initialisation process is launched automatically (the "**init**" message is displayed). When initialisation is completed, the display returns to parameter 70.
    - Turn the system's power supply off and on; the configuration is now completed.
      Note:
      If this parameter is set in other than the "**Stop**" position, the "**STOP**" message flashes and the parameter cannot be modified.
- **Calibration of temperature sensors ("Offset")**
  - The value displayed by certain sensors may be adjusted. To do this, move to the corresponding parameter and enter the desired value (+/- 3 degrees maximum).
- **Generator control forcing**
  - For maintenance operations only, when the system is "**OFF**", it is possible to force generator control by setting to parameter 67 to "**1**".

Caution:
At the end of the operation, forcing must be deactivated (by returning parameter 67 to "0") before restarting the installation.

ACCESS: "D" = direct without password "T" = technical with password

No.	DESIGNATION	ACCESS	RANGE	VALUE / DEFAULT
	Status:			
01	Outside temperature	D	- 40 / + 90 °C	
02	Installation return water temperature	D	- 40 / + 90 °C	
03	Installation outgoing water temperature	D	- 40 / + 90 °C	
04	Water temperature resulting setpoint	D	20 / 45 °C	
05	(unused)			
06	(unused)			
07	(unused)			Read only
08	Ambient temperature, zone 1	D	- 40 / + 90 °C	
09	(unused)			
10	Generator output status	D	0/1	
11	Generator mode output status (1 = heat; 0 = cool)	D	0/1	
12	Outlet status, supp. 1	D	0/1	
13	Outlet status, supp. 2	D	0/1	
14	Outlet status, supp. 3	D	0/1	
	Air temperature settings:			
20	Generator shut-down threshold	T	- 20 / 0 °C	- 15 °C
21	Regional min. temperature	T	- 20 / 0 °C	- 7 °C
22	Supplementary authorization threshold	T	- 5 / 20 °C	7 °C
23	No heating threshold	T	10 / 25 °C	17 °C
24	Lowering of ECO temperature (ambience)	T	1 / 4 K	2 K
	Water temperature settings:			
29	Water temperature setpoint in "anti-freeze" mode	T	20 / 40 °C	25 °C
30	Heating water max. temperature (installation return)	T	25 / 45 °C	35 °C
31	(unused)			
32	Heating water min. temperature (installation return)	T	20 / 30 °C	20 °C
33	(unused)			
34	Cooling water min. temperature (installation return)	T	15 / 25 °C	18 °C
35	Cooling authorization threshold (installation return)	T	25 / 50 °C	30 °C
36	Thermodynamic heating authorization threshold (installation return)	T	10 / 20 °C	15 °C
37	Water outlet temperature max. alarm threshold	T	60 / 90 °C	70 °C
	Water flowrate calculation:			
40	Total electric heating power	T	1 / 30 kW	7.5 kW
41	Launch and calculation result	T		
	Sensor offset:			
50	Outside sensor	T	+ or - 3 K	0
51	Zone 1 air temperature sensor	T	+ or - 3 K	0
52	(unused)			
53	Installation return water temperature sensor	T	+ or - 3 K	0
	Miscellaneous:			
60	Default configuration	T		
61	TYPHONE language selection (1 = F; 2 = GB)	T	1/2	1
62	TYPHONE access code	T	0/9999	1234
63	(unused)			
67	Generator forcing (off)	T	0/1	0
68	Heat/cool outlet condition (off) (1 = heat)	T	0/1	0
	Configuration:			
70	Installation type	T	1/5	
	1 = 1 zone, floor			1
	2 = 2 zones, floor			
	3 = PAC boiler reading			
	4 = mixed			
	5 = terminal units			
	Software versions:			
80	Control unit	T		Read only
81	Heating board	T		
	Ambience setpoints:	D		
	Cooling setpoint zone 1	Direct access Keypad	20 / 30 °C	25 °C
	Heating setpoint zone 1		15 / 25 °C	20 °C

7.7 - ALARMS

- The alarms are indicated by a message flashing alternately on the display.

ALARM	CODE	ACTION	NTR (nothing to report)
Generator fault	**Gr (*)**	**In heating mode**: Suppression of the supplementary heating authorization threshold according to the outside temperature. Supplementary heating load shedding prohibited. Automatic switching to Anti-freeze Mode if case of a fault (indicated by the absence of the bar graph). Restart in the heating mode selected by pressing and holding the "**OK**" button. This acknowledgement is stored in memory and signalled by the "coin" icon which is displayed as long as the generator failure is present. **In cooling mode**: no action. **In Anti-freeze mode**: Suppression of the supplementary heating authorization threshold. Supplementary heating load shedding prohibited.	Auto
Heater fault	**HE**	Prohibits supplementary heating operation.	Auto (**)
Outside air sensor fault	**SAE**	System shut-down	Auto
Installation return water sensor fault	**SEIn**	System shut-down	Auto
Installation outlet water sensor fault	**SEOu**	System shut-down	Auto
Ambience sensor fault zone 1	**SA1**	System shut-down	Auto
Communication or system fault	**Cn**	System shut-down	Auto
Water flowrate fault (slaving with the generator's circulating pump)	**PPE**	Prohibits supplementary heating operation.	Auto
Max. water outlet temperature fault (Adjustable threshold 70°C, parameter 37)	**tE**	System shut-down	Manu.

- Manual reset: by system shut-down after clearing the source of the fault.
- Automatic reset: the alarm disappears when the source of the fault is corrected.
- **Note**:
  The alarms are displayed even if the system is shutdown.
  If several alarms occur simultaneously, the various codes are displayed alternately.

(*) See the type of fault on the generator.
(**) Overheat security with manual reset on the body of the heater. Refer to the **MC8/10** installation manual.

8 - 2-ZONE FLOOR APPLICATION OPERATION

• The operating modes are selected using the rotary knob on the front of the control unit (see chapter 6.1 and user's manual).

8.1 - HEATING MODE

8.1.1 - HEATING OPERATING DIAGRAM

A water rule is determined for each zone.

An outside temperature **X** determines a water temperature resulting setpoint **Y1** for zone 1 and **Y2** for zone 2.

The parameters determining this water rule can be set by the installer (see the table in paragraph 8.7).

The resulting setpoint for zone 1 is displayed at parameter 4.

The resulting setpoint for zone 2 is displayed at parameter 5.

Each resulting setpoint can be corrected as required depending on the ambient temperature of the zone.

The generator is controlled according to the highest resulting setpoint.

The control valve of each zone is controlled according to the resulting setpoint of the zone.

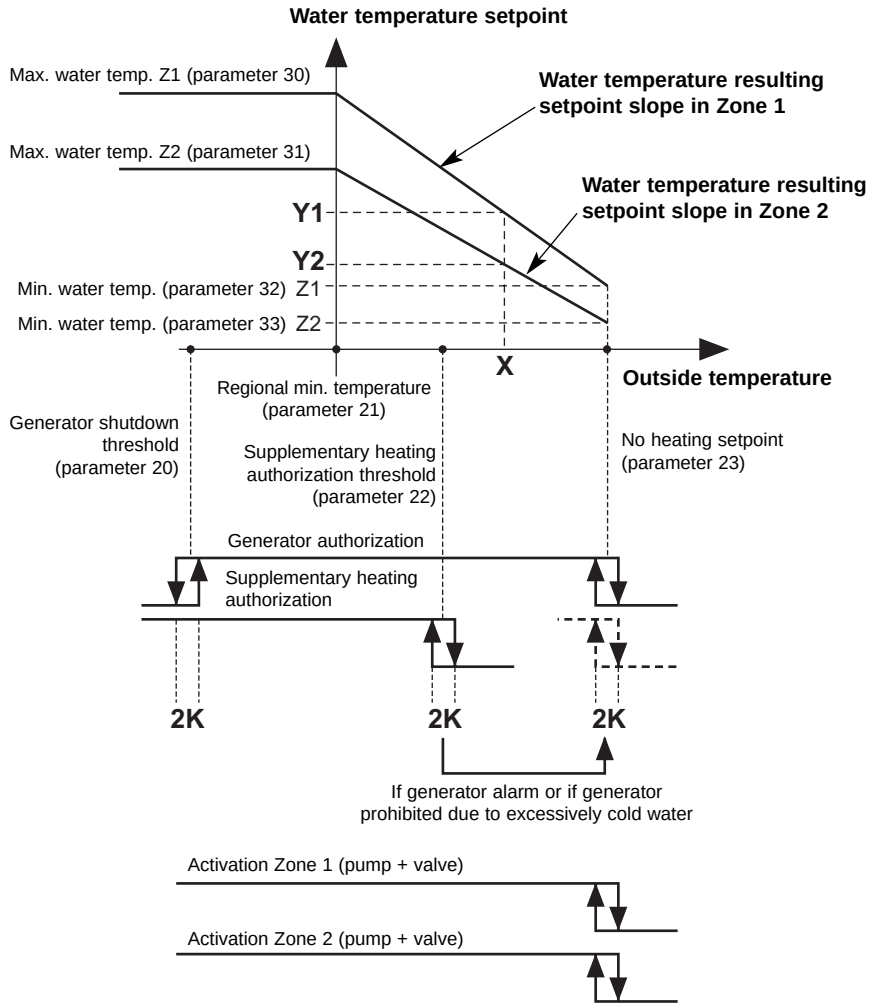

8.1.2 - "COMFORT" HEATING MODE ☼

• **<u>Water temperature setpoint</u>**

- The circulating pump of each zone is actuated and the control valve activated if the outside temperature is less than the non-heating temperature.
- The generator can operate only if the outside temperature is less than the non-heating temperature.
- A water rule is determined for each zone according to the settings that are specific to the zone. A resulting setpoint of the water temperature is calculated according to the outside temperature and the ambient temperature of the zone. The control valve is controlled by the zone board according to this resulting setpoint and the water temperature read by the sensor placed on the outlet of the zone considered.
- The generator and the supplementary heating are thus controlled according to the highest resulting setpoint of the 2 circuits.

For each zone, the water rule is determined by:

- the non-heating temperature (parameter 23),
- the regional minimum temperature (parameter 21),
- the minimum temperature of the water circuit (parameters 32 for zone 1, 33 for zone 2),
- the maximum temperature of the water circuit (parameters 30 for zone 1, 31 for zone 2).

The resulting setpoint calculated in this manner can be corrected by the ambient temperature of the zone:
A difference of +/- 1 degree of ambient temperature in relation to the heating setpoint temperature of the zone (adjustable from 15 to 25 °C) causes the resulting setpoint (water temperature) to decrease or increase of 2 degrees, respectively. However, this variation cannot exceed +/- 4 degrees.

Note:
The PHR(T) generator's heating setpoint value must be greater than or equal to the maximum value of the resulting setpoint.

- **Supplementary electric heating**
  - The heating elements are actuated if the generator is not able to maintain the water return temperature at the calculated value. The supplementary heating by electrical heating elements is staged (2 stages). Tiering is managed by a 10 minute time delay for the 2nd.
  - **Caution**:
    During normal operation, the supplementary heating is authorized only if the outside temperature falls below the authorization threshold (parameter 22) corresponding to the installation's equilibrium temperature and the absence of a load shedding signal. However, if can be authorized for greater temperatures if the generator is experiencing an alarm or if generator operation is prohibited by a safety device (and even if a load shedding signal is present).
    Supplementary heating is prohibited if it is experiencing an alarm.

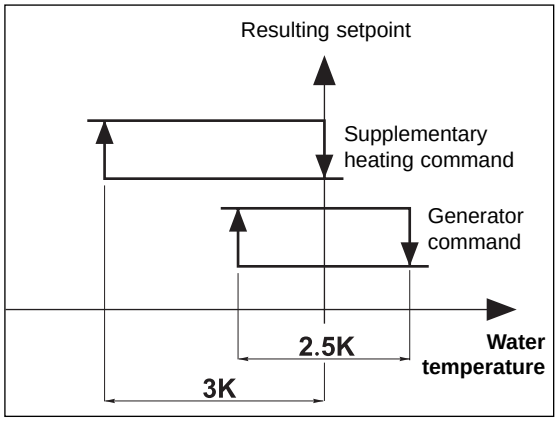

- **Generator operating safety features in heating mode**
  - A safety device on the water temperature (installation return) prohibits generator operation if this temperature is below the thermodynamic heating authorization threshold (parameter 36). In this case, only supplementary heating is authorized to raise the water temperature and allow the generator to operate, regardless of the outside temperature (load shedding is thus inoperative). The activation of this safety feature is indicated by the flashing of the display.
  - Generator operation is prohibited if the outside temperature is below the generator's shut-off threshold (parameter 20). Only supplementary heating is authorized (load shedding is thus inoperative).

8.1.3 - "ECONOMY" HEATING MODE ☽

- The switch to "**ECO**" mode lowers the ambient temperature setpoint of the zone by a value than can be adjusted from 1 to 4K (parameter 24).
- It can only be activated in heating mode (inactive in cooling mode).
- Switching from "**Comfort**" to "**ECO**" is accomplished either by hourly programming, weekly programming by zone or by actuating the rotary knob for the 2 zones.
- In the case of hourly programming, the user can activate a temporary override (1 hour + periods of 1 hour during the current day) per zone.

8.1.4 - "ANTI-FREEZE" HEATING MODE (prolonged absence)

- Selection for the 2 zones is made using the rotary knob on the control unit.
- The water temperature resulting setpoint passes to an adjustable value (parameter 29 is factory-set at 25 °C) identical for the 2 zones.
  Each zone can only be activated (circulating pump and control valve) if the ambient temperature of the zone is less than 12 °C.
  If the ambient temperature of the zone rises above this threshold, the circulating pump stops (after a 1 minute delay) and the valve is closed.
- **In order to guarantee a minimal thermal load, the generator can only operate if at least one zone is activated (circulating pump in operation and valve open).**

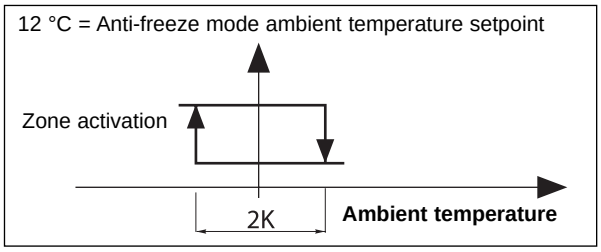

8.2 - COOLING MODE

- Selection for the 2 zones is made using the rotary knob on the control unit.
- The generator operates with its own water temperature setpoint (recommended setting: 22 °C installation return).
- Each zone can only be activated (circulating pump and control valve) if the ambient temperature of the zone is greater than the zone's setpoint. At this moment, the zone valve adjusts the water temperature of the floor outgoing line according to an adjustable setpoint (parameter 34 is factory-set at 20 °C).
  If the ambient temperature of the zone drops below this threshold, the circulating pump stops (after a 1 minute delay) and the valve is closed.
- **In order to guarantee a minimal thermal load, the generator can only operate if at least one zone is activated (circulating pump in operation and valve open).**

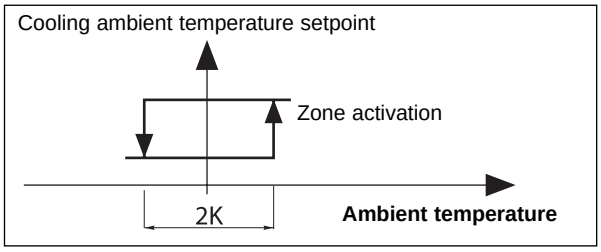

- **Generator operating safety features in cooling mode**
  - Generator operation is prohibited if the installation return water temperature is above a threshold (parameter 35). The activation of this safety feature is indicated by the flashing of the display.
  - An "anti-condensation" device on the installation's outgoing temperature prohibits generator operation if this temperature is below 15 °C.

8.3 - FLOWRATE MEASUREMENT

- Through special action of parameter 41, a flowrate measurement sequence can be launched calculated with the water temperature difference between the outlet and the return following forced operation of the heating elements for 240 seconds. During this period, generator operation is prohibited. The flowrate is displayed at the end of this period. During the measurement operation, the alarms remain active (and notably the supplementary heating fault and water pump slaving). This operation can only be performed with installation shut down "**OFF**" and by a qualified technician.
- Procedure:
  - Ensure that the installation is ready to operate and notably that **water is circulating** and that the circuit has been purged.
  - Forced zone activation (see § 8.5.3) to ensure a thermal load for the entire installation.
  - Go to parameter 40 and enter **the total electric heating power** (7.5 kW by default).
  - Go to parameter 41.
    Note:
    If this parameter is set in other than the "**Stop**" position, the word "**STOP**" is displayed and the calculation cannot be launched.
  - Press and hold the "**OK**" button for 5 seconds to launch the measurement.
  - The countdown display flashes.
  - When the countdown is completed, the flowrate is displayed (in m^3/h).
  - Exit the parameters to reinitialise this function.
  - Deactivate zone forcing.

  If a fault appears during the countdown, the sequence is stopped immediately and the heating elements are disconnected. The display automatically exits the parameter menu.
- **Note**: The value displayed is only an indication; a more precise result requires the appropriate measuring equipment.

8.4 - GENERATOR CONTROL

- **In order to guarantee a minimal thermal load, the generator can only operate if at least one zone is activated (circulating pump in operation and valve open).**
- In terms of temperature control, the generator is controlled by an adjustable minimum operating time (parameter 64 is factory-set at 100 seconds). This time delay is not activated in the event the system is shut down or safety device-actuated shutdown.
- Forcing: for maintenance operations only, when the system is "**OFF**", it is possible to force generator control by setting to parameter 67 to "**1**".

> **Caution:**
> **At the end of the operation, forcing must be deactivated (by returning parameter 67 to "0") before restarting the installation.**

8.5 - CONTROL OF ZONE OUTGOING LINES

- Managed by the zone board.

8.5.1 - VALVES

- Valves operating in mix.
- "3-point" motor (230 VAC) with proportional chrono control:
  - Time base = $\frac{\text{Valve action time (parameter 63)}}{10}$
  - Percentage of the control time = $\frac{\text{Difference (setpoint/ water outlet temperature)}}{\text{Proportional strip (parameter 38)}}$

    This percentage is displayed at parameter 17 for zone 1 and 18 for zone 2,
    ("**+**" sign = open, "**–**" sign = closed)
    In the neutral zone (parameter 39), the valve is not controlled.
- The valves are equipped with a limit switch which detect valve closure (contact closed = valve closed).

8.5.2 - CIRCULATING PUMPS

- Pump shutdown is delayed 1 minute.

8.5.3 - FORCING

- When the system is "**OFF**", and for maintenance operations only, it is possible to force the operation of each zone (circulating pump on and opening of the control valve) by setting parameter 65 to "**1**" for zone 1 and setting parameter 66 to "**1**" for zone 2.

> **Caution:**
> **At the end of the operation, forcing must be deactivated (by returning parameters 65 and 66 to "0") before restarting the installation.**

8.6 - MISCELLANEOUS

- Mode changes using the rotary knob (**Heating / Cooling / Anti-freeze / Stop**) are delayed 10 seconds in order to filter inappropriate actions. However, the "**Time Setting**" and "**Hourly Programming**" positions do not have the time delay feature.
- The authorization thresholds on the water temperature are cut-off values with a differential of 1K for the reset.

8.7 - PARAMETERS

- **General**
  - 2 access levels:
    - Level 1, read only, with direct access for parameters 1 to 19,
    - Level 2, ("technical level") accessible by password ("**1958**"). This level is entered via parameter 20, although all parameters are accessible.
      Refer to the procedure in the user's manual.
  - Pressing and holding the "**OK**" button enables you to exit a parameter and return to the normal display.
    In all cases (except for the flowrate calculation), the display returns to normal automatically after 2 minutes if no buttons are pressed for level 1 and after 15 minutes for level 2.
  - The parameters can be accessed and modified both in operation and when shut down, except for those for the flowrate calculation, installation configuration and default configuration which can only be accessed and modified when the installation is shut down.
    Note:
    The flashing parameter values are those that can be modified. Otherwise, the display remains steady.
- **Default configuration**
  - This enables the default values (see list) of all parameters to be reset according to the type of installation.
  - Procedure:
    - Set the rotary knob on the control unit to the "**Stop**" position.
    - Go to parameter 60. Press the "**Z/OK**" button; the "**init**" message is displayed.
      Note:
      If this parameter is set in other than the "**Stop**" position, the word "**STOP**" flashes and the configuration cannot be launched.
    - Press and hold the "**Z/OK**" button for 5 seconds to launch the default configuration. The "**init**" message flashes. When initialisation is completed, the display returns to parameter 60.
- **Configuration of installation type**
  The following elements must be verified each time the installation is placed into service.
  - **For the 2-zones floor application, parameter 70 must be set to 2.**
  - Procedure:
    - Set the rotary knob on the control unit to the "**Stop**" position.
    - Go to parameter 70. Press the "**Z/OK**" button; the value of the parameter is displayed. This value may be read or modified using the **+** and **–** buttons if the system is in the "**Stop**" position. If parameters are modified, an initialisation process is launched automatically (the "**init**" message is displayed). When initialisation is completed, the display returns to parameter 70.
    - Turn the system's power supply off and on; the configuration is now completed.
      Note:
      If this parameter is set in other than the "**Stop**" position, the "**STOP**" message flashes and the parameter cannot be modified.
- **Calibration of temperature sensors ("Offset")**
  - The value displayed by certain sensors may be adjusted. To do this, move to the corresponding parameter and enter the desired value (+/- 3 degrees maximum).
- **Zone 1 ambient temperature sensor**
  - If the control unit is not located in zone 1, an ambient temperature sensor must be connected to the zone 1 board and the control unit's sensor deactivated. To do this, set parameter 69 to "**0**".

ACCESS: "D" = direct without password "T" = technical with password

No.	DESIGNATION	ACCESS	RANGE	VALUE / DEFAULT
	Status:			
01	Outside temperature	D	- 40 / + 90 °C	
02	Installation return water temperature	D	- 40 / + 90 °C	
03	Installation outgoing water temperature	D	- 40 / + 90 °C	
04	Water temperature resulting setpoint, zone 1	D	20 / 45 °C	
05	Water temperature resulting setpoint, zone 2	D	20 / 45 °C	
06	Water temperature, zone 1	D	- 40 / + 90 °C	
07	Water temperature, zone 2	D	- 40 / + 90 °C	
08	Ambient temperature, zone 1	D	- 40 / + 90 °C	
09	Ambient temperature, zone 2	D	- 40 / + 90 °C	Read only
10	Generator output status	D	0/1	
11	Generator mode output status (1 = heat; 0 = cool)	D	0/1	
12	Outlet status, supp. 1	D	0/1	
13	Outlet status, supp. 2	D	0/1	
14	Outlet status, supp. 3	D	0/1	
15	Outlet status, circulator zone 1	D	0/1	
16	Outlet status, circulator zone 2	D	0/1	
17	Control valve zone 1	D	- 100 / + 100 %	
18	Control valve zone 2	D	- 100 / + 100 %	
	Air temperature settings:			
20	Generator shut-down threshold	T	- 20 / 0 °C	- 15 °C
21	Regional min. temperature	T	- 20 / 0 °C	- 7 °C
22	Supplementary authorization threshold	T	- 5 / 20 °C	7 °C
23	No heating threshold	T	10 / 25 °C	17 °C
24	Lowering of ECO temperature (ambience)	T	1 / 4 K	2 K
	Water temperature settings:			
29	Water temperature setpoint in "anti-freeze" mode	T	20 / 40 °C	25 °C
30	Outgoing heating water max. temperature, zone 1	T	25 / 45 °C	35 °C
31	Outgoing heating water max. temperature, zone 2	T	25 / 45 °C	35 °C
32	Outgoing heating water min. temperature, zone 1	T	20 / 30 °C	20 °C
33	Outgoing heating water min. temperature, zone 2	T	20 / 30 °C	20 °C
34	Outgoing cooling water temperature, zones 1 and 2	T	15 / 25 °C	20 °C
35	Cooling authorization threshold (installation return)	T	25 / 50 °C	30 °C
36	Thermodynamic heating authorization threshold (installation return)	T	10 / 20 °C	15 °C
37	Water outlet temperature max. alarm threshold	T	60 / 90 °C	70 °C
38	Zone valve control proportional strip	T	1 / 10 K	5 K
39	Zone valve control neutral zone	T	1 / 4 K	1 K
	Water flowrate calculation:			
40	Total electric heating power	T	1 / 30 kW	7.5 kW
41	Launch and calculation result	T		
	Sensor offset:			
50	Outside sensor	T	+ or - 3 K	0
51	Zone 1 air temperature sensor	T	+ or - 3 K	0
52	Zone 2 air temperature sensor	T	+ or - 3 K	0
53	Installation return water temperature sensor	T	+ or - 3 K	0
	Miscellaneous:			
60	Default configuration	T		
61	TYPHONE language selection (1 = F ; 2 = GB)	T	1/2	1
62	TYPHONE access code	T	0/9999	1234
63	Zone valve action time	T	60 / 300 sec.	150 sec.
64	Generator min. operating time	T	0 / 200 sec.	100 sec.
65	Forcing, zone 1 (off)	T	0/1	0
66	Forcing, zone 2 (off)	T	0/1	0
67	Generator control forcing	T	0/1	0
68	Heat/cool outlet condition (off) (1 = actuated = heat)	T	0/1	0
69	Ambient temperature sensor, zone 1 (1 = control unit)	T	0/1	1
	Configuration:			
70	Installation type	T	1/5	
	1 = 1 zone, floor			
	2 = 2 zones, floor ----------			→ 2
	3 = PAC boiler reading			
	4 = mixed			
	5 = terminal units			
	Software versions:			
80	Control unit	T		
81	Heating board	T		Read only
82	Board zone 1	T		
83	Board zone 2	T		
	Ambience setpoints:	D		
	Cooling setpoint zone 1	Direct access Keypad	20 / 30 °C	25 °C
	Cooling setpoint zone 2		20 / 30 °C	25 °C
	Heating setpoint zone 1		15 / 25 °C	20 °C
	Heating setpoint zone 2		15 / 25 °C	20 °C

8.8 - ALARMS

- The alarms are indicated by a message flashing alternately on the display.

ALARM	CODE	ACTION	NTR (nothing to report)
Generator fault	**Gr (*)**	**In heating mode**: Suppression of the supplementary heating authorization threshold according to the outside temperature. Supplementary heating load shedding prohibited. Automatic switching to Anti-freeze Mode if case of a fault (indicated by the absence of the bar graph). Restart in the heating mode selected by pressing and holding the "**OK**" button. This acknowledgement is stored in memory and signalled by the "coin" icon which is displayed as long as the generator failure is present. **In cooling mode**: no action. **In Anti-freeze mode**: Suppression of the supplementary heating authorization threshold. Supplementary heating load shedding prohibited.	Auto
Heater fault	**HE**	Prohibits supplementary heating operation.	Auto (**)
Outside air sensor fault	**SAE**	System shut-down	Auto
Installation return water sensor fault	**SEIn**	System shut-down	Auto
Installation outlet water sensor fault	**SEOu**	System shut-down	Auto
Water sensor fault, zone 1	**SE1**	Deactivation, zone 1: - Pump shutdown. - Valve closure.	Auto
Water sensor fault, zone 2	**SE2**	Deactivation, zone 2: - Pump shutdown. - Valve closure.	Auto
Ambience sensor fault zone 1	**SA1**	Deactivation, zone 1: - Pump shutdown. - Valve closure.	Auto
Ambience sensor fault zone 2	**SA2**	Deactivation, zone 2: - Pump shutdown. - Valve closure.	Auto
Communication or system fault	**Cn**	System shut-down	Auto
Communication fault, zone 1	**Cn1**	Deactivation, zone 1: - Pump shutdown. (***) - Valve closure.	Auto
Communication fault, zone 2	**Cn2**	Deactivation, zone 2: - Pump shutdown. (***) - Valve closure.	Auto
Water flowrate fault (slaving with the generator's circulating pump)	**PPE**	Prohibits supplementary heating operation.	Auto
Max. water outlet temperature fault (Adjustable threshold 70°C, parameter 37)	**tE**	System shut-down	Manu.

- Manual reset: by system shut-down after clearing the source of the fault.
- Automatic reset: the alarm disappears when the source of the fault is corrected.
- **Note**:
  The alarms are displayed even if the system is shutdown.
  If several alarms occur simultaneously, the various codes are displayed alternately.

(*) See the type of fault on the generator.
(**) Overheat security with manual reset on the body of the heater. Refer to the **MC8/10** installation manual.
(***) The sum of alarms **Cn1 + Cn2** causes the generator and supplementary heating to shut down.

9 - MIXED 2-ZONE APPLICATION OPERATION

- **ZONE 1 = FLOOR** **- with circulating pump and control valve (in the M2Z M).**
- **ZONE 2 = TERMINAL UNITS** **- with circulating pump (in the M2Z M).**
- The operating modes are selected using the rotary knob on the front of the control unit (see chapter 6.1 and user's manual).

9.1 - HEATING MODE

9.1.1 - HEATING OPERATING DIAGRAM

A water rule is determined for each zone.

An outside temperature **X** determines a water temperature resulting setpoint **Y1** for zone 1 and **Y2** for zone 2.

The parameters determining this water rule can be set by the installer (see the table in paragraph 9.7).

The resulting setpoint for zone 1 is displayed at parameter 4.

The resulting setpoint for zone 2 is displayed at parameter 5.

The resulting setpoint (zone 1) can be corrected as required according to the ambient temperature of the zone.

The generator is controlled according to the highest resulting setpoint.

The control valve of zone is controlled according to the resulting setpoint of the zone.

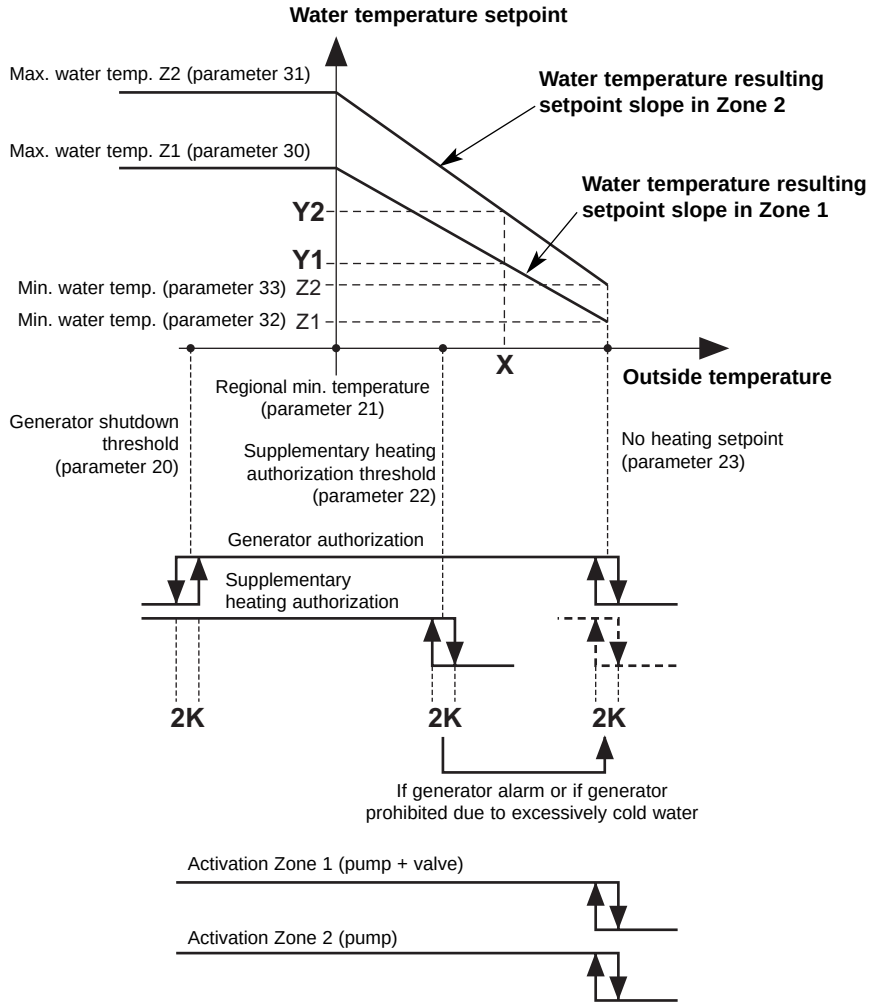

9.1.2 - "COMFORT" HEATING MODE ☼

- **<u>Water temperature setpoint</u>**
  - The circulating pump of each zone is actuated and the zone 1 control valve activated if the outside temperature is less than the non-heating temperature.
  - The generator can operate only if the outside temperature is less than the non-heating temperature.
  - A water rule is determined for each zone according to the settings that are specific to the zone. A water temperature resulting setpoint is calculated according to the outside temperature.
  - The generator and supplementary heating are then controlled according to the highest resulting setpoint (which will be that of zone 2 in the majority of cases - Terminal Units).

  For each zone, the water rule is determined by:
  - the non-heating temperature (parameter 23),
  - the regional minimum temperature (parameter 21),
  - the minimum temperature of the water circuit (parameters 32 for zone 1, 33 for zone 2),
  - the maximum temperature of the water circuit (parameters 30 for zone 1, 31 for zone 2).

  <u>For zone 1, Floor</u>:

  The control valve is controlled by the zone board according to the resulting setpoint of the zone and the water temperature read by the sensor placed on the zone 1 outgoing line, Floor.

  The resulting setpoint can be corrected by the ambient temperature of zone 1:
  A difference of +/- 1 degree of ambient temperature in relation to the heating setpoint temperature of the zone (adjustable from 15 to 25 °C) causes the resulting setpoint (water temperature) to decrease or increase of 2 degrees, respectively. However, this variation cannot exceed +/- 4 degrees.

For zone 2, Terminal Units:

This zone is supplied by the generator (and supplementary heating, if any). Ambient temperature is controlled by the thermostats of the Terminal Units.

Note: The PHR(T) generator's heating setpoint value must be greater than or equal to the maximum value of the resulting setpoint.

- **Supplementary electric heating**
  - The heating elements are actuated if the generator is not able to maintain the water return temperature at the calculated value. The supplementary heating by electrical heating elements is staged (2 stages). Tiering is managed by a 10 minute time delay for the 2nd.
  - **Caution**:
    During normal operation, the supplementary heating is authorized only if the outside temperature falls below the authorization threshold (parameter 22) corresponding to the installation's equilibrium temperature and the absence of a load shedding signal. However, if can be authorized for greater temperatures if the generator is experiencing an alarm or if generator operation is prohibited by a safety device (and even if a load shedding signal is present).
    Supplementary heating is prohibited if it is experiencing an alarm.

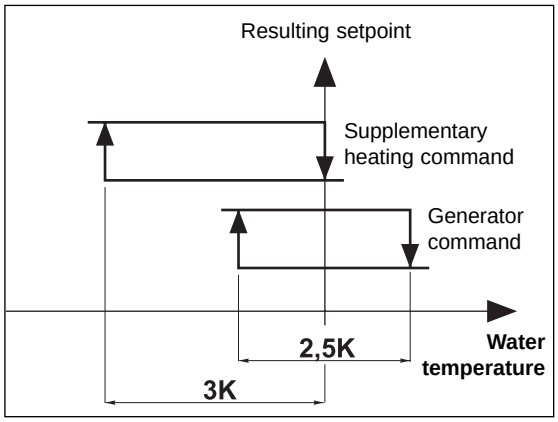

- **Generator operating safety features in heating mode**
  - A safety device on the water temperature (installation return) prohibits generator operation if this temperature is below the thermodynamic heating authorization threshold (parameter 36). In this case, only supplementary heating is authorized to raise the water temperature and allow the generator to operate, regardless of the outside temperature (load shedding is thus inoperative). The activation of this safety feature is indicated by the flashing of the display.
  - Generator operation is prohibited if the outside temperature is below the generator's shut-off threshold (parameter 20). Only supplementary heating is authorized (load shedding is thus inoperative).

9.1.3 - "ECONOMY" HEATING MODE ☽

- It can only be activated in heating mode (inactive in cooling mode).
- Switching from "**Comfort**" to "**ECO**" is accomplished either by hourly programming, weekly programming by zone or by actuating the rotary knob for the 2 zones.
- In the case of hourly programming, the user can activate a temporary override (1 hour + periods of 1 hour during the current day) per zone.

For zone 1, Floor:

- The switch to "**ECO**" mode lowers the ambient temperature setpoint of the zone by a value than can be adjusted from 1 to 4K (parameter 24).

For zone 2, Terminal Units:

- Switching to "**ECO**" mode causes the "**ECO**" contact to close on the Terminal Units' remote controls.
  Note: the potential-free "ECO" contact can be used with VLV only. See the details in the MC8/10 installation manual

9.1.4 - "ANTI-FREEZE" HEATING MODE (prolonged absence) 💼

- Selection for the 2 zones is made using the rotary knob on the control unit.

For zone 1, Floor:

- The water temperature resulting setpoint passes to an adjustable value (parameter 29 is factory-set at 25 °C).
  Zone 1 can only be activated (circulating pump and control valve) if the ambient temperature of the zone is less than 12 °C.
  If the ambient temperature of zone 1 rise above this threshold, the circulating pump stops (after a 1 minute delay) and the valve is closed.

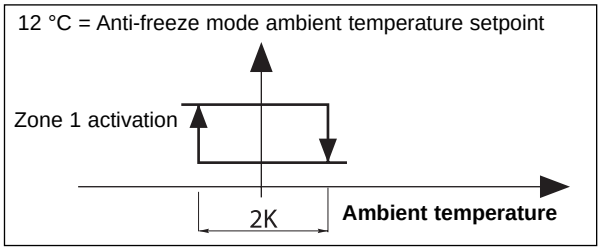

For zone 2, Terminal Units:

- The water temperature resulting setpoint of zone 2 is lowered 5 °C.
- The "ECO" contact for the remote controls of the Terminal Units closes.
  Note: the potential-free "ECO" contact can be used with VLV only. See the details in the MC8/10 installation manual

9.2 - COOLING MODE

- Selection for the 2 zones is made using the rotary knob on the control unit.
- The generator operates with its own water temperature setpoint (recommended setting: 12 °C installation return).

For zone 1, Floor:

- Zone 1 can only be activated (circulating pump and control valve) if the ambient temperature of the zone is greater than the zone's setpoint. At this moment, the zone valve adjusts the water temperature of the floor outgoing line according to an adjustable setpoint (parameter 34 is factory-set at 20 °C).
  If the ambient temperature of the zone drops below this threshold, the circulating pump stops (after a 1 minute delay) and the valve is closed.

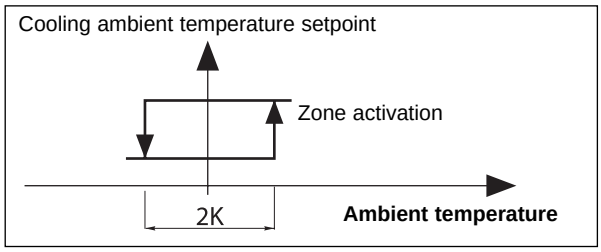

For zone 2, Terminal Units:

- The circulating pump of zone 2 is engaged as soon as the cooling mode is selected.
- This zone is supplied by the generator. Ambient temperature is controlled by the thermostats of the Terminal Units.

- **Generator operating safety features in cooling mode**
  - Generator operation is prohibited if the installation return water temperature is above a threshold (parameter 35). The activation of this safety feature is indicated by the flashing of the display.

9.3 - FLOWRATE MEASUREMENT

- Through special action of parameter 41, a flowrate measurement sequence can be launched calculated with the water temperature difference between the outlet and the return following forced operation of the heating elements for 240 seconds. During this period, generator operation is prohibited. The flowrate is displayed at the end of this period. During the measurement operation, the alarms remain active (and notably the supplementary heating fault and water pump slaving). This operation can only be performed with installation shut down "**OFF**" and by a qualified technician.
- Procedure:
  - Ensure that the installation is ready to operate and notably that **water is circulating** and that the circuit has been purged.
  - Activate the zones by forcing (see § 9.5.3) and put the Terminal Units is heating mode to ensure a thermal load for the entire installation.
  - Go to parameter 40 and enter **the total electric heating power** (7.5 kW by default).
  - Go to parameter 41.
    Note:
    If this parameter is set in other than the "**Stop**" position, the word "**STOP**" is displayed and the calculation cannot be launched.
  - Press and hold the "**OK**" button for 5 seconds to launch the measurement.
  - The countdown display flashes.
  - When the countdown is completed, the flowrate is displayed (in m^3/h).
  - Exit the parameters to reinitialise this function.
  - Deactivate zone forcing.

  If a fault appears during the countdown, the sequence is stopped immediately and the heating elements are disconnected. The display automatically exits the parameter menu.

  Note: The value displayed is only an indication; a more precise result requires the appropriate measuring equipment.

9.4 - GENERATOR CONTROL

- In heating mode, in order to guarantee a minimal thermal load at generator start-up, a forcing sequence of zone 1 Floor can be initiated if this zone is not activated (pump shut-down and/or valve closed). We thus have:
  - Opening order of the valve and circulating pump operation for a maximum of 300 seconds.
  - After a 100 second delay, generator command for the minimum operating time (parameter 64 factory-set at 100 seconds).
    If the generator is off (either by the temperature control, or at the end of the minimum operating time), the forcing sequence is stopped.
    At the end of the forcing sequence, control of the pump and the valve is taken over by the temperature control.
- Forcing: for maintenance operations only, when the system is "**OFF**", it is possible to force generator control by setting to parameter 67 to "**1**".

Caution:
At the end of the operation, forcing must be deactivated (by returning parameter 67 to "0") before restarting the installation.

9.5 - CONTROL OF ZONE OUTGOING LINES

- Managed by the zone board.

9.5.1 - VALVE

- Valve, zone 1, Floor in mixed operation.
- "3-point" motor (230 VAC) with proportional chrono control:

- Time base = $\frac{\text{Valve action time (parameter 63)}}{10}$
- Percentage of the control time = $\frac{\text{Difference (setpoint/ water outlet temperature)}}{\text{Proportional strip (parameter 38)}}$

  This percentage is displayed at parameter 17 for zone 1 and 18 for zone 2,
  ("**+**" sign = open, "**–**" sign = closed)
  In the neutral zone (parameter 39), the valve is not controlled.

• The valve is equipped with a limit switch which detect valve closure (contact closed = valve closed).

9.5.2 - CIRCULATING PUMPS

• Pump shutdown is delayed 1 minute.

9.5.3 - FORCING

• When the system is "**OFF**", and for maintenance operations only, it is possible to force the operation of each zone (circulating pump on and opening of the zone 1 control valve) by setting parameter 65 to "**1**" for zone 1 and setting parameter 66 to "**1**" for zone 2.

Caution:
At the end of the operation, forcing must be deactivated (by returning parameters 65 and 66 to "0") before restarting the installation.

9.6 - MISCELLANEOUS

• Mode changes using the rotary knob (**Heating / Cooling / Anti-freeze / Stop**) are delayed 10 seconds in order to filter inappropriate actions. However, the "**Time Setting**" and "**Hourly Programming**" positions do not have the time delay feature.

• The authorization thresholds on the water temperature are cut-off values with a differential of 1K for the reset.

9.7 - PARAMETERS

• **General**
- 2 access levels:
  - Level 1, read only, with direct access for parameters 1 to 19,
  - Level 2, ("technical level") accessible by password ("**1958**"). This level is entered via parameter 20, although all parameters are accessible.
    Refer to the procedure in the user's manual.
- Pressing and holding the "**OK**" button enables you to exit a parameter and return to the normal display.
  In all cases (except for the flowrate calculation), the display returns to normal automatically after 2 minutes if no buttons are pressed for level 1 and after 15 minutes for level 2.
- The parameters can be accessed and modified both in operation and when shut down, except for those for the flowrate calculation, installation configuration and default configuration which can only be accessed and modified when the installation is shut down.
  Note: The flashing parameter values are those that can be modified. Otherwise, the display remains steady.

• **Default configuration**
- This enables the default values (see list) of all parameters to be reset according to the type of installation.
- Procedure:
  - Set the rotary knob on the control unit to the "**Stop**" position.
  - Go to parameter 60. Press the "**Z/OK**" button; the "**init**" message is displayed.
    Note: If this parameter is set in other than the "**Stop**" position, the word "**STOP**" flashes and the configuration cannot be launched.
  - Press and hold the "**Z/OK**" button for 5 seconds to launch the default configuration. The "**init**" message flashes. When initialisation is completed, the display returns to parameter 60.

• **Configuration of installation type**
The following elements must be verified each time the installation is placed into service.
- **For 2 mixed zones application, parameter 70 must be set to 4.**
- Procedure:
  - Set the rotary knob on the control unit to the "**Stop**" position.
  - Go to parameter 70. Press the "**Z/OK**" button; the value of the parameter is displayed. This value may be read or modified using the **+** and **–** buttons if the system is in the "**Stop**" position. If parameters are modified, an initialisation process is launched automatically (the "**init**" message is displayed). When initialisation is completed, the display returns to parameter 70.
  - Turn the system's power supply off and on; the configuration is now completed.
    Note: If this parameter is set in other than the "**Stop**" position, the "**STOP**" message flashes and the parameter cannot be modified.

• **Calibration of temperature sensors ("Offset")**
- The value displayed by certain sensors may be adjusted. To do this, move to the corresponding parameter and enter the desired value (+/- 3 degrees maximum).

• **Zone 1 ambient temperature sensor**
- If the control unit is not located in zone 1, an ambient temperature sensor must be connected to the zone 1 board and the control unit's sensor deactivated. To do this, set parameter 69 to "**0**".

ACCESS: "D" = direct without password "T" = technical with password

No.	DESIGNATION	ACCESS	RANGE	VALUE / DEFAULT
	Status:			
01	Outside temperature	D	- 40 / + 90 °C	
02	Installation return water temperature	D	- 40 / + 90 °C	
03	Installation outgoing water temperature	D	- 40 / + 90 °C	
04	Water temperature resulting setpoint, zone 1	D	20 / 45 °C	
05	Water temperature resulting setpoint, zone 2	D	20 / 45 °C	
06	Water temperature, zone 1	D	- 40 / + 90 °C	
07	(unused)			
08	Ambient temperature, zone 1	D	- 40 / + 90 °C	Read only
09	(unused)			
10	Generator output status	D	0/1	
11	Generator mode output status (1 = heat; 0 = cool)	D	0/1	
12	Outlet status, supp. 1	D	0/1	
13	Outlet status, supp. 2	D	0/1	
14	Outlet status, supp. 3	D	0/1	
15	Outlet status, circulator zone 1	D	0/1	
16	Outlet status, circulator zone 2	D	0/1	
17	Control valve zone 1	D	- 100 / + 100 %	
	Air temperature settings:			
20	Generator shut-down threshold	T	- 20 / 0 °C	- 13 °C
21	Regional min. temperature	T	- 20 / 0 °C	- 7 °C
22	Supplementary authorization threshold	T	- 5 / 20 °C	7 °C
23	No heating threshold	T	10 / 25 °C	17 °C
24	Lowering of ECO temperature (ambience)	T	1 / 4 K	2 K
	Water temperature settings:			
29	Water temperature setpoint in "anti-freeze" mode	T	20 / 40 °C	25 °C
30	Outgoing heating water max. temperature, zone 1	T	25 / 45 °C	35 °C
31	Heating water max. temperature, zone 2	T	35 / 45 °C	40 °C
32	Outgoing heating water min. temperature, zone 1	T	20 / 30 °C	20 °C
33	Heating water min. temperature, zone 2	T	25 / 35 °C	30 °C
34	Outgoing cooling water temperature, zone 1	T	15 / 25 °C	20 °C
35	Cooling authorization threshold (installation return)	T	25 / 50 °C	30 °C
36	Thermodynamic heating authorization threshold (installation return)	T	10 / 20 °C	15 °C
37	Water outlet temperature max. alarm threshold	T	60 / 90 °C	70 °C
38	Zone 1 valve control proportional strip	T	1 / 10 K	5 K
39	Zone 1 valve control neutral zone	T	1 / 4 K	1 K
	Water flowrate calculation:			
40	Total electric heating power	T	1 / 30 kW	7.5 kW
41	Launch and calculation result	T		
	Sensor offset:			
50	Outside sensor	T	+ or - 3 K	0
51	Zone 1 air temperature sensor	T	+ or - 3 K	0
52	(unused)			
53	Installation return water temperature sensor	T	+ or - 3 K	0
	Miscellaneous:			
60	Default configuration	T		
61	TYPHONE language selection (1 = F ; 2 = GB)	T	1/2	1
62	TYPHONE access code	T	0/9999	1234
63	Zone 1 valve action time	T	60 / 300 sec.	150 sec.
64	Generator min. operating time	T	0 / 200 sec.	100 sec.
65	Forcing, zone 1 (off)	T	0/1	0
66	Forcing, zone 2 (off)	T	0/1	0
67	Generator control forcing	T	0/1	0
68	Heat/cool outlet condition (off) (1 = actuated = heat)	T	0/1	0
69	Ambient temperature sensor, zone 1 (1 = control unit)	T	0/1	1
	Configuration:			
70	Installation type	T	1/5	
	1 = 1 zone, floor			
	2 = 2 zones, floor			
	3 = PAC boiler reading			
	4 = mixed ----------			→ 4
	5 = terminal units			
	Software versions:			
80	Control unit	T		
81	Heating board	T		Read only
82	Board zone 1	T		
83	Board zone 2	T		
	Ambience setpoints:	D		
	Cooling setpoint zone 1	Direct access Keypad	20 / 30 °C	25 °C
	Heating setpoint zone 1		15 / 25 °C	20 °C

9.8 - ALARMS

- The alarms are indicated by a message flashing alternately on the display.

ALARM	CODE	ACTION	NTR (nothing to report)
Generator fault	**Gr (*)**	**In heating mode**: Suppression of the supplementary heating authorization threshold according to the outside temperature. Supplementary heating load shedding prohibited. Automatic switching to Anti-freeze Mode if case of a fault (indicated by the absence of the bar graph). Restart in the heating mode selected by pressing and holding the "**OK**" button. This acknowledgement is stored in memory and signalled by the "coin" icon which is displayed as long as the generator failure is present. **In cooling mode**: no action. **In Anti-freeze mode**: Suppression of the supplementary heating authorization threshold. Supplementary heating load shedding prohibited.	Auto
Heater fault	**HE**	Prohibits supplementary heating operation.	Auto (**)
Outside air sensor fault	**SAE**	System shut-down	Auto
Installation return water sensor fault	**SEIn**	System shut-down	Auto
Installation outlet water sensor fault	**SEOu**	System shut-down	Auto
Water sensor fault, zone 1	**SE1**	Deactivation, zone 1: - Pump shutdown. - Valve closure.	Auto
Ambience sensor fault zone 1	**SA1**	Deactivation, zone 1: - Pump shutdown. - Valve closure.	Auto
Communication or system fault	**Cn**	System shut-down	Auto
Communication fault, zone 1	**Cn1**	Deactivation, zone 1: - Pump shutdown. (***) - Valve closure.	Auto
Communication fault, zone 2	**Cn2**	Deactivation, zone 2: - Pump shutdown. (***)	Auto
Water flowrate fault (slaving with the generator's circulating pump)	**PPE**	Prohibits supplementary heating operation.	Auto
Max. water outlet temperature fault (Adjustable threshold 70°C, parameter 37)	**tE**	System shut-down	Manu.

- Manual reset: by system shut-down after clearing the source of the fault.
- Automatic reset: the alarm disappears when the source of the fault is corrected.
- **Note**:
  The alarms are displayed even if the system is shutdown.
  If several alarms occur simultaneously, the various codes are displayed alternately.

(*) See the type of fault on the generator.
(**) Overheat security with manual reset on the body of the heater. Refer to the **MC8/10** installation manual.
(***) The sum of alarms **Cn1 + Cn2** causes the generator and supplementary heating to shut down.

10 - 1 ZONE OPERATION, TERMINAL UNITS

- The operating modes are selected using the rotary knob on the front of the control unit (see chapter 6.1 and user's manual).
- In this application, the ambient temperature being controlled by the Terminal Unit thermostats, the control unit of the system displays, instead of the setpoints, the "**HEAT**" and "**COOL**" messages

10.1 - HEATING MODE

10.1.1 - HEATING OPERATING DIAGRAM

An outside temperature **X** determines a resulting water temperature setpoint **Y**.

The parameters determining this water rule can be set by the installer (see the table in paragraph 10.7).

The resulting setpoint is displayed at parameter 4.

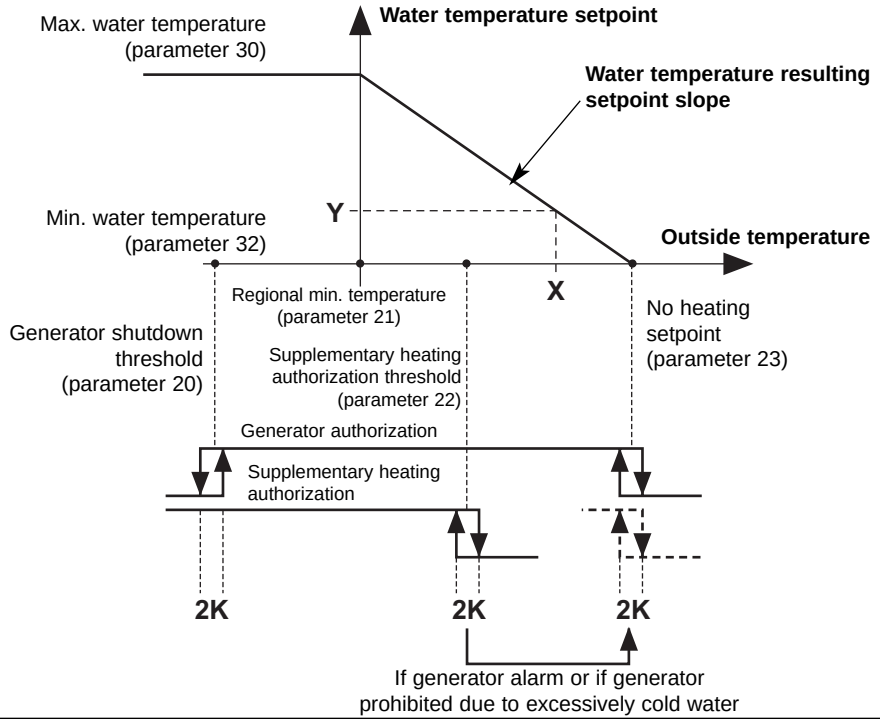

10.1.2 - "COMFORT" HEATING MODE ☼

- **Temperature setpoint**
  - The generator can operate only if the outside temperature is less than the non-heating temperature.
  - The generator is controlled via the heating board according to a **resulting setpoint** of the water temperature (installation return) calculated according to an adjustable water rule determined by:
    - the non-heating temperature (parameter 23),
    - the regional minimum temperature (parameter 21),
    - the minimum temperature of the water circuit (parameter 32),
    - the maximum temperature of the water circuit (parameter 30).

  Note:
  The PHR(T) generator's heating setpoint value must be greater than or equal to the maximum value of the resulting setpoint.

- **Supplementary electric heating**
  - The heating elements are actuated if the generator is not able to maintain the water return temperature at the calculated value. The supplementary heating by electrical heating elements is staged (2 stages). Tiering is managed by a 10-minute time delay for the 2nd.
  - **Caution**:
    During normal operation, the supplementary heating is authorized only if the outside temperature falls below the authorization threshold (parameter 22) corresponding to the installation's equilibrium temperature and the absence of a load shedding signal. However, if can be authorized for greater temperatures if the generator is experiencing an alarm or if generator operation is prohibited by a safety device (and even if a load shedding signal is present).
    Supplementary heating is prohibited if it is experiencing an alarm.

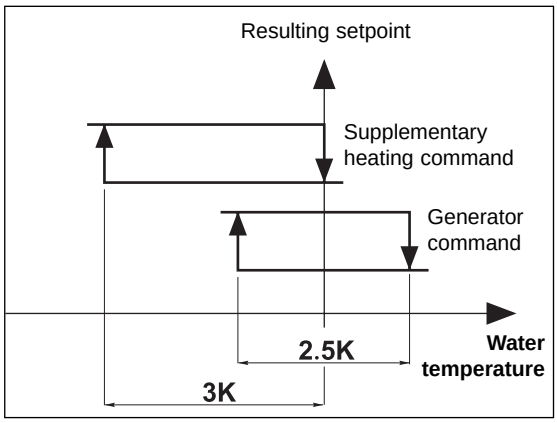

- **Generator operating safety features in heating mode**
  - A safety device on the water temperature (installation return) prohibits generator operation if this temperature is below the thermodynamic heating authorization threshold (parameter 36). In this case, only supplementary heating is authorized to raise the water temperature and allow the generator to operate, regardless of the outside temperature (load shedding is thus inoperative). The activation of this safety feature is indicated by the flashing of the display.
  - Generator operation is prohibited if the outside temperature is below the generator's shut-off threshold (parameter 20). Only supplementary heating is authorized (load shedding is thus inoperative).

10.1.3 - "ECONOMY" HEATING MODE

- Switching to "**ECO**" mode causes the "**ECO**" contact to close on the Terminal Units' remote controls.
  Note: the potential-free "ECO" contact can be used with VLV only. See the details in the MC8/10 installation manual
- It can only be activated in heating mode (inactive in cooling mode).
- Switching from "**Comfort**" to "**ECO**" is accomplished either by hourly programming, weekly programming by zone or by actuating the rotary knob for the entire installation.
- In the case of hourly programming, the user can activate a temporary override (1 hour + periods of 1 hour during the current day) per zone.

10.1.4 - "ANTI-FREEZE" HEATING MODE (prolonged absence)

- Selection is made using the rotary knob on the control unit for the entire installation.
- The water temperature resulting setpoint is lowered 5 K.

10.2 - COOLING MODE

- Selection is made using the rotary knob on the control unit for the entire installation.
- The generator is controlled as soon as the cooling mode is selected and operates with its own water temperature setpoint (recommended setting: 12 °C installation return).
- **Generator operating safety features in cooling mode**
  - Generator operation is prohibited if the installation return water temperature is above a threshold (parameter 35). The activation of this safety feature is indicated by the flashing of the display.

10.3 - FLOWRATE MEASUREMENT

- Through special action of parameter 41, a flowrate measurement sequence can be launched calculated with the water temperature difference between the outlet and the return following forced operation of the heating elements for 240 seconds. During this period, generator operation is prohibited. The flowrate is displayed at the end of this period. During the measurement operation, the alarms remain active (and notably the supplementary heating fault and water pump slaving). This operation can only be performed with installation shut down "**OFF**" and by a qualified technician.
- Procedure:
  - Ensure that the installation is ready to operate and notably that **water is circulating** and that the circuit has been purged.
  - Set the Terminal Units for heating operation to ensure a thermal load.
  - Go to parameter 40 and enter **the total electric heating power** (7.5 kW by default).
  - Go to parameter 41.
    Note:
    If this parameter is set in other than the "**Stop**" position, the word "**STOP**" is displayed and the calculation cannot be launched.
  - Press and hold the "**OK**" button for 5 seconds to launch the measurement.
  - The countdown display flashes.
  - When the countdown is completed, the flowrate is displayed (in m^3/h).
  - Exit the parameters to reinitialise this function.

  If a fault appears during the countdown, the sequence is stopped immediately and the heating elements are disconnected. The display automatically exits the parameter menu.
- **Note**: The value displayed is only an indication; a more precise result requires the appropriate measuring equipment.

10.4 - GENERATOR CONTROL

- In terms of temperature control, the generator is controlled by an adjustable minimum operating time (parameter 64 is factory-set at 100 seconds). This time delay is not activated in the event the system is shut down or safety device-actuated shutdown.
- Forcing: for maintenance operations only, when the system is "**OFF**", it is possible to force generator control by setting to parameter 67 to "**1**".

Caution:
At the end of the operation, forcing must be deactivated (by returning parameter 67 to "0") before restarting the installation.

10.5 - 2nd ZONE - ELECTRIC CONVECTORS

- A 2nd zone equipped with electric convectors can also be managed (Max. number = 20). These appliances must be equipped with an electronic thermostat (not included) able to receive signals via a 230 VAC pilot wire (standard GIFAM 4).
- The 2nd zone is activated by setting the microswitch in the back of the control unit to the "**ON**" position.
  - In "**Comfort**", "**ECO**" or "**Anti-freeze**" heating modes, the corresponding signals are transmitted to the 2nd zone.
  - In **cooling** mode and in the **Stop** position, the shut-down signal is transmitted to the 2nd zone.
  - In **heating mode with hourly programming**, the "**Comfort**" or "**ECO**" signals are transmitted to the 2nd zone according to the corresponding hourly programming.
    Note:
    In case of load shedding, a shut-down signal is transmitted to the 2nd zone.
  - In heating mode, the display unit indicates for the zone 2 "**HEAT**".

10.6 - MISCELLANEOUS

- Mode changes using the rotary knob (**Heating / Cooling / Anti-freeze / Stop**) are delayed 10 seconds in order to filter inappropriate actions. However, the "**Time Setting**" and "**Hourly Programming**" positions do not have the time delay feature.
- The authorization thresholds on the water temperature are cut-off values with a differential of 1K for the reset.

10.7 - PARAMETERS

- **General**
  - 2 access levels:
    - Level 1, read only, with direct access for parameters 1 to 19,
    - Level 2, ("technical level") accessible by password ("**1958**"). This level is entered via parameter 20, although all parameters are accessible.
      Refer to the procedure in the user's manual.
  - Pressing and holding the "**OK**" button enables you to exit a parameter and return to the normal display.
    In all cases (except for the flowrate calculation), the display returns to normal automatically after 2 minutes if no buttons are pressed for level 1 and after 15 minutes for level 2.
  - The parameters can be accessed and modified both in operation and when shut down, except for those for the flowrate calculation, installation configuration and default configuration which can only be accessed and modified when the installation is shut down.
    Note:
    The flashing parameter values are those that can be modified. Otherwise, the display remains steady.
- **Default configuration**
  - This enables the default values (see list) of all parameters to be reset according to the type of installation.
  - Procedure:
    - Set the rotary knob on the control unit to the "**Stop**" position.
    - Go to parameter 60. Press the "**Z/OK**" button; the "**init**" message is displayed.
      Note:
      If this parameter is set in other than the "**Stop**" position, the word "**STOP**" flashes and the configuration cannot be launched.
    - Press and hold the "**Z/OK**" button for 5 seconds to launch the default configuration. The "**init**" message flashes. When initialisation is completed, the display returns to parameter 60.
- **Configuration of installation type**
  The following elements must be verified each time the installation is placed into service.
  - **For the Terminal Units application, parameter 70 must be set to 5.**
  - Procedure:
    - Set the rotary knob on the control unit to the "**Stop**" position.
    - Go to parameter 70. Press the "**Z/OK**" button; the value of the parameter is displayed. This value may be read or modified using the **+** and **–** buttons if the system is in the "**Stop**" position. If parameters are modified, an initialisation process is launched automatically (the "**init**" message is displayed). When initialisation is completed, the display returns to parameter 70.
    - Turn the system's power supply off and on; the configuration is now completed.
      Note:
      If this parameter is set in other than the "**Stop**" position, the "**STOP**" message flashes and the parameter cannot be modified.
- **Calibration of temperature sensors ("Offset")**
  - The value displayed by certain sensors may be adjusted. To do this, move to the corresponding parameter and enter the desired value (+/- 3 degrees maximum).

ACCESS: "D" = direct without password "T" = technical with password

No.	DESIGNATION	ACCESS	RANGE	VALUE / DEFAULT
	Status:			
01	Outside temperature	D	- 40 / + 90 °C	
02	Installation return water temperature	D	- 40 / + 90 °C	
03	Installation outgoing water temperature	D	- 40 / + 90 °C	
04	Water temperature resulting setpoint	D	20 / 45 °C	
05	(unused)			
06	(unused)			
07	(unused)			Read only
08	Ambient temperature, zone 1	D	- 40 / + 90 °C	
09	(unused)			
10	Generator output status	D	0/1	
11	Generator mode output status (1 = heat; 0 = cool)	D	0/1	
12	Outlet status, supp. 1	D	0/1	
13	Outlet status, supp. 2	D	0/1	
14	Outlet status, supp. 3	D	0/1	
	Air temperature settings:			
20	Generator shut-down threshold	T	- 20 / 0 °C	- 13 °C
21	Regional min. temperature	T	- 20 / 0 °C	- 7 °C
22	Supplementary authorization threshold	T	- 5 / 20 °C	7 °C
23	No heating threshold	T	10 / 25 °C	17 °C
	Water temperature settings:			
30	Heating water max. temperature (installation return)	T	25 / 45 °C	40 °C
31	(unused)			
32	Heating water min. temperature (installation return)	T	20 / 30 °C	30 °C
33	(unused)			
34	(unused)			
35	Cooling authorization threshold (installation return)	T	25 / 50 °C	30 °C
36	Thermodynamic heating authorization threshold (installation return)	T	10 / 20 °C	15 °C
37	Water outlet temperature max. alarm threshold	T	60 / 90 °C	70 °C
	Water flowrate calculation:			
40	Total electric heating power	T	1 / 30 kW	7.5 kW
41	Launch and calculation result	T		
	Sensor offset:			
50	Outside sensor	T	+ or - 3 K	0
51	Zone 1 air temperature sensor	T	+ or - 3 K	0
52	(unused)			
53	Installation return water temperature sensor	T	+ or - 3 K	0
	Miscellaneous:			
60	Default configuration	T		
61	TYPHONE language selection (1 = F; 2 = GB)	T	1/2	1
62	TYPHONE access code	T	0/9999	1234
64	Generator min. operating time	T	0 / 200 sec.	100 sec.
67	Generator forcing (off)	T	0/1	0
68	Heat/cool outlet condition (off) (1 = heat)	T	0/1	0
	Configuration:			
70	Installation type	T	1/5	
	1 = 1 zone, floor			
	2 = 2 zones, floor			
	3 = PAC boiler reading			
	4 = mixed			
	5 = terminal units ----------			→ 5
	Software versions:			
80	Control unit	T		Read only
81	Heating board	T		

10.8 - ALARMS

- The alarms are indicated by a message flashing alternately on the display.

ALARM	CODE	ACTION	NTR (nothing to report)
Generator fault	**Gr (*)**	**In heating mode**: Suppression of the supplementary heating authorization threshold according to the outside temperature. Supplementary heating load shedding prohibited. Automatic switching to Anti-freeze Mode if case of a fault (indicated by the absence of the bar graph). Restart in the heating mode selected by pressing and holding the "**OK**" button. This acknowledgement is stored in memory and signalled by the "coin" icon which is displayed as long as the generator failure is present. **In cooling mode**: no action. **In Anti-freeze mode**: Suppression of the supplementary heating authorization threshold. Supplementary heating load shedding prohibited.	Auto
Heater fault	**HE**	Prohibits supplementary heating operation.	Auto (**)
Outside air sensor fault	**SAE**	**Heating**: operation with resulting setpoint 40 °C. Suppression of outside temperature thresholds. **Cooling**: no action.	Auto
Installation return water sensor fault	**SEIn**	System shut-down	Auto
Installation outlet water sensor fault	**SEOu**	System shut-down	Auto
Communication or system fault	**Cn**	System shut-down	Auto
Water flowrate fault (slaving with the generator's circulating pump)	**PPE**	Prohibits supplementary heating operation.	Auto
Max. water outlet temperature fault (Adjustable threshold 70°C, parameter 37)	**tE**	System shut-down	Manu.

- Manual reset: by system shut-down after clearing the source of the fault.
- Automatic reset: the alarm disappears when the source of the fault is corrected.
- **Note**:
  The alarms are displayed even if the system is shutdown.
  If several alarms occur simultaneously, the various codes are displayed alternately.

(*) See the type of fault on the generator.
(**) Overheat security with manual reset on the body of the heater. Refer to the **MC8/10** installation manual.

11 - TELEPHONE CONTROL

- For the applications:
  - 1 zone, floor
  - 2 zones, floor
  - 2 zones, mixed

  Does not operate for the Terminal Units application.
- A **DELTA-DORE TYPHONE 500** type telephone control box can be connected to the communication **BUS** (available from **DELTA-DORE** distributors).
  Caution:
  Its date-code number must be greater than 05-24.
  Consult the manual supplied with the telephone control.
- By calling the telephone line on which the **TYPHONE** is recorded, the user can:
  - know the ambient temperature of zone 1,
  - know the setpoint temperature of the current mode of zone 1,
  - send an override setpoint provided that the system is operating in **heating mode.** Do not use in cooling mode. During override, zone 1 operates in "**Comfort**" mode with the new temperature setpoint.
    This override is indicated by an index on the LCD. Any action on the rotary knob deactivates the override and extinguishes the indicator.
- Parameters possibilities:
  - access code change (parameter 62 = 1234 by default),
  - interface language change - French / English (parameter 61 = 1 French by default).

Due to our policy of continuous development, our products are liable to modification without notice.

Technibel

R.D. 28 Reyrieux BP 131 01601 Trévoux CEDEX France
Tel. 33 4 74 00 92 92 - Fax 33 4 74 00 42 00
R.C.S. Bourg-en-Bresse B 759 200 728