(Etiquette signalétique)

NOTICE D'INSTALLATION **F**

INSTALLATION INSTRUCTION **GB**

MANUALE D'INSTALLAZIONE **I**

MANUAL DE INSTALACIÓN **E**

AUFSTELLUNGS-HANDBUCH **D**

MCE 8 / MCE 10

MODULE CHAUFFAGE ÉLECTRIQUE
ELECTRIC HEATING MODULE
MODULO RISCALDAMENTO ELETTRICO INTEGRATIVO
MÓDULO DE CALEFACCIÓN ELÉCTRICA
ELEKTRO HEIZMODUL

Avril 2007

10 11 464 - F.GB.I.E.D - 03

GB

MARKING CE

This product marked CE conforms to the essential requirements of the Directives:
- Low voltage no. 2006/95/EC.
- Electromagnetic Compatibility no. 89/336 EEC, modified 92/31 and 93/68 EEC.

CONTENTS

1 - General 2
2 - Presentation 3
3 - Installation 4
4 - Connections 4
5 - Machine start up 11
6 - Maintenance Instructions 12
7 - Electrical diagrams 13

1 - GENERAL

1.1 - GENERAL SUPPLY CONDITIONS

- Generally speaking, the material is transported at the consignee's risk.
- The consignee must immediately provide the carrier with written reserves if any damage caused during transport is found.

1.2 - RECOMMENDATIONS

- Prior to any intervention on the unit, installation, commissioning, operation or maintenance, the personnel performing these operations must be familiar with all instructions and recommendations provided in this installation manual, as well as the elements presented in the project's technical data package.
- The personnel in charge of receiving the unit should conduct a visual inspection to detect any damage to the unit caused during transport.
- The unit must be installed, commissioned, maintained, and serviced by qualified personnel in compliance with the requirements of all current directives, laws and regulations and according to recognized trade practices.

1.3 - VOLTAGE

- Before all operation, check that the voltage indicated on the appliance rating plate corresponds with that of the mains supply.

1.4 - USE

- This equipment is intended for the air-conditioning of premises and to provide comfort for the personnel.

1.5 - OPERATING CONDITIONS

- **This product is designed for use exclusively with a PHR 6 to 20 type generator or PHRT 7 to 16.**

1.6 - MODELS

- **MCE 8** : 3 x 2.5 kW for **PHR 6** to **20** and **PHRT 7** to **16** (single or three-phase).
- **MCE 10** : 3 x 3.3 kW for **PHR 11** to **20** and **PHRT 12** to **16** (three-phase only).

2 - PRESENTATION

GB

2.1 - DESCRIPTION

1 - Housing
2 - Cover
3 - Heater
MCE 8 : 1st stage = 2 x 2.5 kW; 2nd stage = 1 x 2.5 kW
MCE 10 : 1st stage = 2 x 3.3 kW; 2nd stage = 1 x 3.3 kW
4 - Thermal safety thermostat with manual reset
5 - Air bleeder
6 - Water pressostat
7 - Electrical panel
8 - Electronic board
9 - Power connection terminal strip
10 - Control connection terminal strips
11 - Circuit breakers
12 - Water inlet
13 - Water outlet
14 - Electrical cable glands

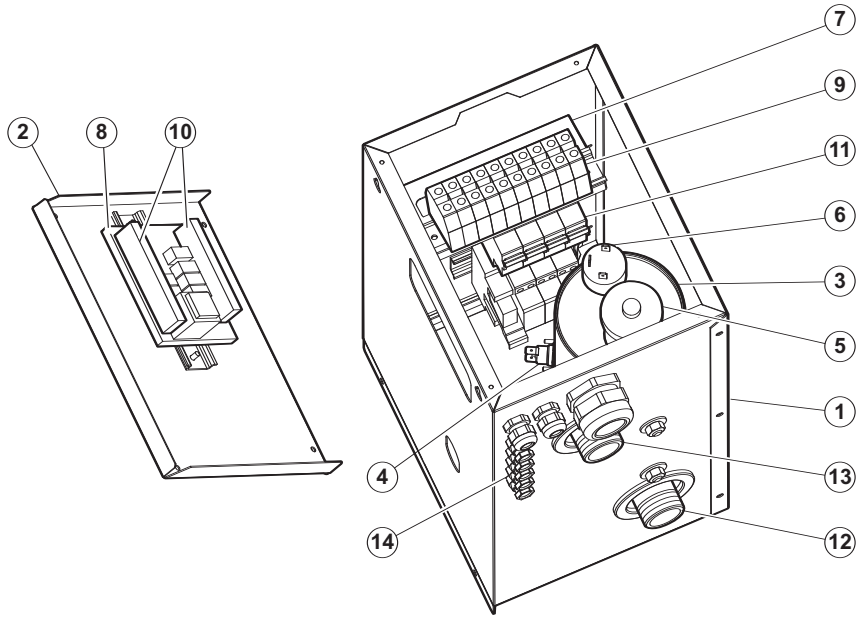

2.2 - DIMENSIONS AND WEIGHT

1	Water inlet connection 1" (male)
2	Water outlet connection 1" (male)
3	Holes for electric cables

Weight (kg)	
MCE 8	MCE 10
9	10

	MCE 8	MCE 10
A mm	450	500
B mm	425	475
C mm	418	468

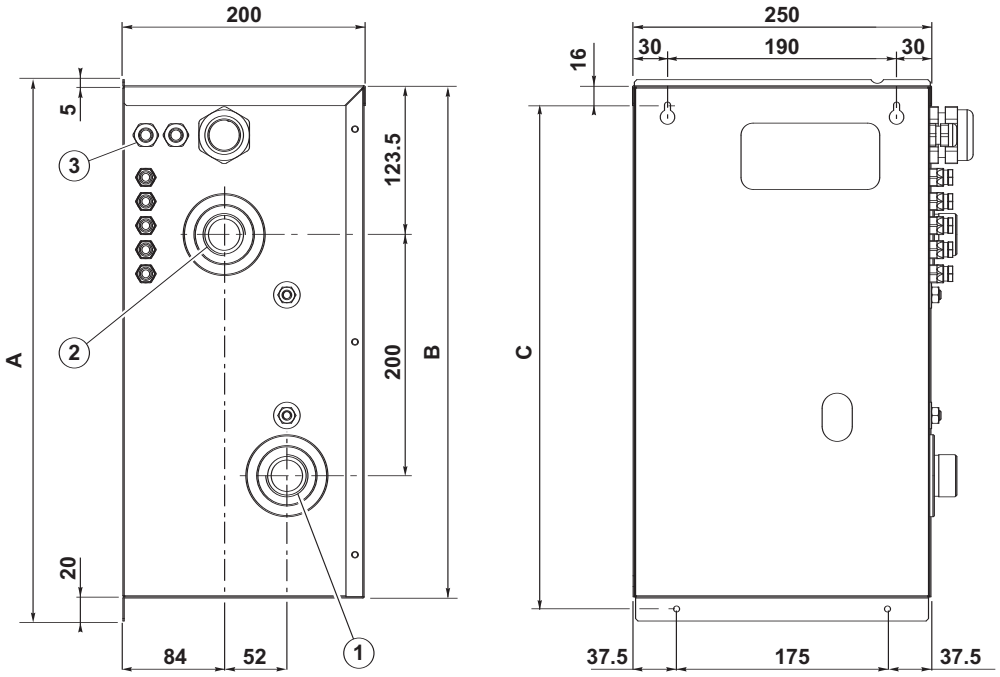

3 - INSTALLATION

GB

- The module can be installed on the generator or in the equipment room.

3.1 - INSTALLATION ON THE GENERATOR

- Protection rating of the heating module installed on the generator: IP 44.
- The module is mounted behind the generator.
- Use the 4 screws provided.
- Fit the 2 upper screws on the generator. Tighten slightly.

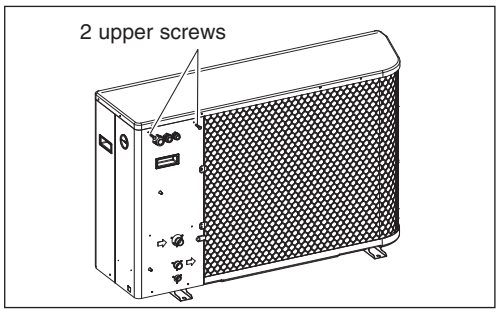

- Remove the cover from the module (4 screws on top).
- Position the module by hooking it to the 2 upper screws.
- Tighten the screws.

  Note: MCE 10 mounting

  the generator may not yet be equipped with the 2 lower mounting holes. In this case, secure the MCE 10 with the 2 upper screws and drill the 2 lower holes (ø 3) being careful not to damage the tubes and components behind the pane.

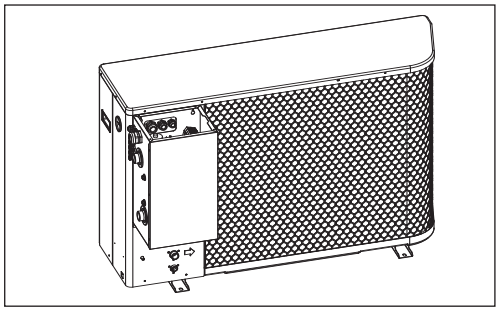

- Install the 2 lower screws.

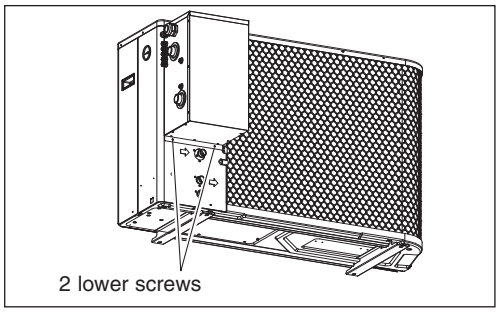

3.2 - EQUIPMENT ROOM INSTALLATION

- Install in a sheltered location.
- Remove the cover from the module (4 screws on top).
- Secure the module to the wall. See the position of the 4 mounting holes in paragraph 2.2.

  <u>Caution</u>: for safety reasons, the module must be placed completely against the wall so as to block the holes located at the rear and prevent any risk of contact with internal components.

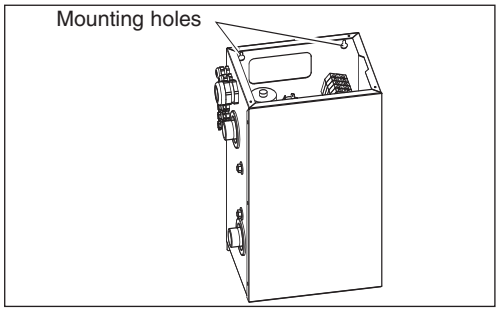

4 - CONNECTIONS

4.1 - HYDRAULIC CONNECTION

- The module is to be connected on the installation's outgoing line, at the generator's outlet. The inlet enters the module from below.

  The installation return is made directly on the generator's inlet.

4.1.1 - HYDRAULIC SCHEMATIC DIAGRAM

- **Important** :
  - **Module operation requires that a safety valve (3 bar) be installed on the hydraulic system.**
  - **If the module is installed on the generator, the valve located in the generator performs this function.**
  - **If the module is installed in an equipment room, fit a valve near the module, directly connected to it (without a shut-off valve between the module and the valve).**

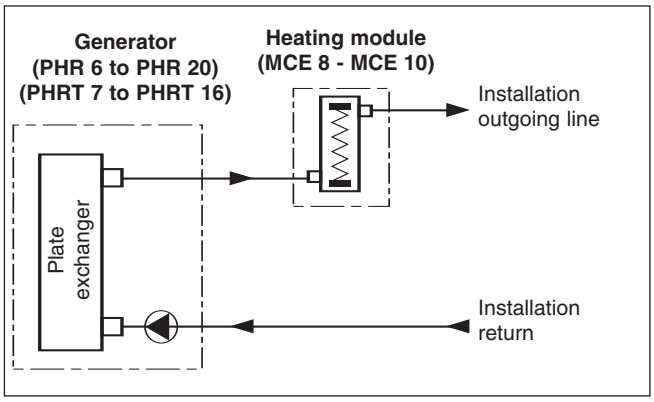

4.1.2 - MODULE ON THE GENERATOR

- Use the connection kit accessory:
  - Code **70600106** for **PHR 6**, **PHR 8**, **PHRT 7** and **PHRT 9**.

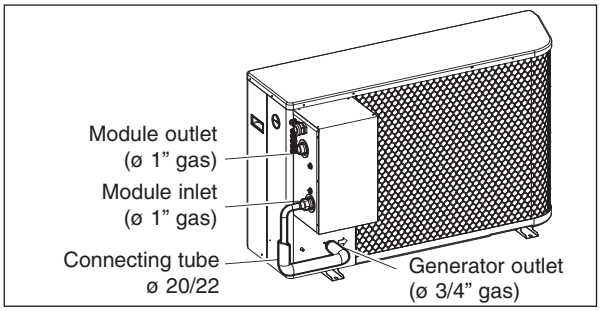

  - Code **70600107** for **PHR 11**, **PHR 15**, **PHR 17**, **PHR 20** and **PHRT 12, PHRT 16**.

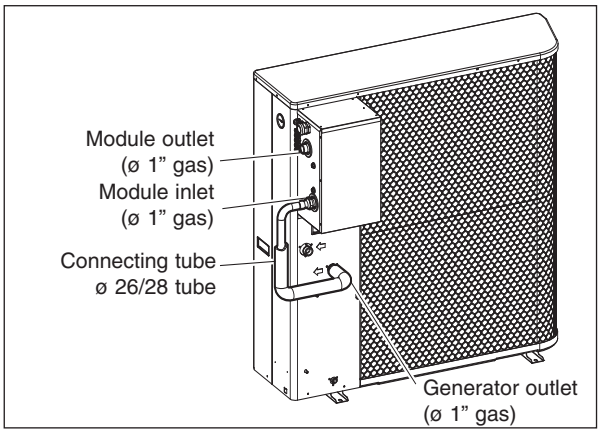

- The kit includes:
  - 1 insulated connecting tube.
  - 1 single-phase generator power cable.
  - 1 three-phase generator power cable.
  - 1 generator control cable.

4.1.3 - MODULE IN THE EQUIPMENT ROOM

- Make the connections according to the hydraulic diagram.

4.2 - ELECTRICAL CONNECTIONS

4.2.1 - GENERAL

- Class 1 apparatus, intended for an installation equipped with a neutral point connection (TT as per NFC 15-100) in domestic applications.
- Breaking capacity of the circuit breakers for the module: 3 kA as per NFC 61-410.
- Voltage variation tolerance: +/- 10% in operation.
- The electrical connection conduits must be secured.
- Use the cable glands mounted on the unit - see § 4.2.4.
- Ensure that all installation grounds are interconnected.
- Cables are not supplied.
- Consult the module electrical diagram.
- Also consult the installation manuals of the generator, the control box and the 2-zone module (floor or mixed) as required.

4.2.2 - DESCRIPTION OF CONNECTIONS

4.2.2.1 - MAINS SUPPLY

- The electrical power supplies must be located downstream from a protection and cut-off device (not supplied) in compliance with the standards and regulations in force. The protection must be ensured by a single-phase two-pole or three-phase four-pole circuit breaker.
- The power supply is connected to the power terminal strip located inside the module.
- The **MCE 8** is designed to be supplied with either single-phase 230V or three-phase 400V.
  In three-phase, the bridge on the terminal strip must be removed.
- The **MCE 10** is designed to be supplied to 400V (three-phase) only.

- Wire sizes indicated below are provided for informational purposes only. They must be checked and adapted to the installation conditions as required.
  Cable size calculation assumptions (as per NFC 15-100):
  - Copper multipolar cable with PR (XLPE) insulation,
  - Cable installation method (3A, 4A, 5A, reference method B),
  - One single power cable,
  - Ambient temperature (yearly average): 20°C for a cable outside,
    30°C for a cable inside.
  - Head end protection by circuit breaker.

- 2 installation cases may occured:
  - either with the module installed on the generator,
  - or with the module mounted separately in the equipment room.

GB

- **Heating Module installed on the generator:**
  - The mains power supply for the **module + generator** is available on the power terminal strip of the module:

Model		MCE 8 + PHR 6 single	MCE 8 + PHR 8 single	MCE 8 + PHR 8 three	MCE 8 + PHR 11 single	MCE 8 + PHR 11 three	MCE 8 + PHR 15 three	MCE 8 + PHR 17 three	MCE 8 + PHR 20 three
Max. total amperage	**A**	46	51	19	56	21	24	25	29
Main power supply protection rating	**A**	50	63	25	63	25	32	32	32
Mains power cable size Module + PHR	**mm²**	10	16	4	16	4	6	6	6

Model		MCE 8 + PHRT 7 single	MCE 8 + PHRT 9 single	MCE 8 + PHRT 9 three	MCE 8 + PHRT 12 single	MCE 8 + PHRT 12 three	MCE 8 + PHRT 16 three		
Max. total amperage	**A**	49	51	19	56	21	24		
Main power supply protection rating	**A**	63	63	25	63	25	32		
Mains power cable size Module + PHRT	**mm²**	16	16	4	16	4	6		

Model						MCE 10 + PHR 11 three	MCE 10 + PHR 15 three	MCE 10 + PHR 17 three	MCE 10 + PHR 20 three
Max. total amperage	**A**					24	27	28	32
Main power supply protection rating	**A**					32	32	32	32
Mains power cable size Module + PHR	**mm²**					6	6	6	6

Model						MCE 10 + PHRT 12 three	MCE 10 + PHRT 16 three		
Max. total amperage	**A**					24	27		
Main power supply protection rating	**A**					32	32		
Mains power cable size Module + PHRT	**mm²**					6	6		

- The generator is powered from the module terminal strip.
  In this case only, a smaller cable in relation to the mains power supply cable is allows:
  - 6 mm² for generator, single-phase,
  - 4 mm² for generator, three-phase.
  This cable must be routed inside the equipment, using the cable glands provided for this purpose.

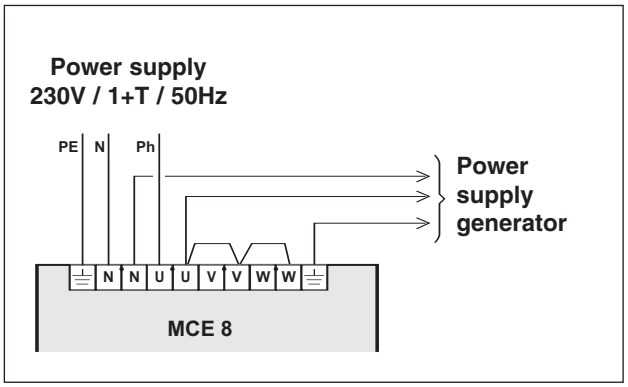

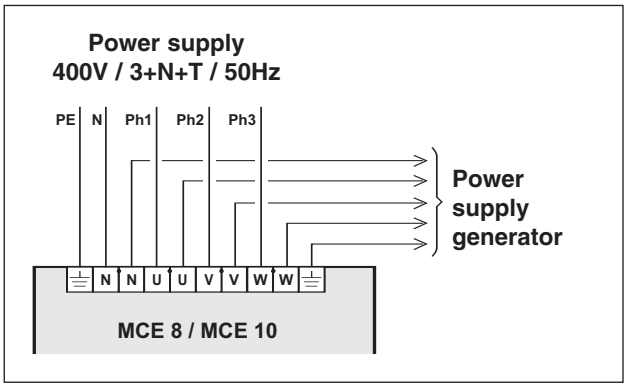

- **Heating Module mounted separately:**
  - In this case, the module must be installed inside sheltered equipment rooms.
  - There is thus 2 separate power supplies:
    - one for the generator (refer to the corresponding installation manual),
    - one for the module.

Model		**PHR 6 single**	**PHR 8 single**	**PHR 8 three**	**PHR 11 single**	**PHR 11 three**	**PHR 15 three**	**PHR 17 three**	**PHR 20 three**
Voltage	**V**	230V-1	230V-1	400V-3	230V-1	400V-3	400V-3	400V-3	400V-3
Ampere rating	**A**	10	14	6	17	7.5	10	11	16
Max. current **PHR**	**A**	13	18	8	23	10	13	14	18
Recommended power cable size PHR	**mm²**	2.5	4	2.5	4	2.5	2.5	2.5	4

Model		**PHRT 7 single**	**PHRT 9 single**	**PHRT 9 three**	**PHRT 12 single**	**PHRT 12 three**	**PHRT 16 three**		
Voltage	**V**	230V-1	230V-1	400V-3	230V-1	400V-3	400V-3		
Ampere rating	**A**	13	15	6	17	7.5	10		
Max. current **PHRT**	**A**	16	18	7.5	21	9	13		
Recommended power cable size PHRT	**mm²**	4	4	2.5	4	2.5	2.5		
Heating capacity **MCE 8**	**kW**	3 x 2.5	3 x 2.5	3 x 2.5	3 x 2.5	3 x 2.5	3 x 2.5	3 x 2.5	
Current requirement **MCE 8**	**A**	33	33	11	33	11	11	11	
Recommended power cable size MCE 8	**mm²**	6	6	2.5	6	2.5	2.5	2.5	
Heating capacity **MCE 10**	**kW**				3 x 3.3	3 x 3.3	3 x 3.3	3 x 3.3	
Current requirement **MCE 10**	**A**				14.3	14.3	14.3	14.3	
Recommended power cable size MCE 10	**mm²**				2.5	2.5	2.5	2.5	

Power supply
230V / 1+G / 50Hz

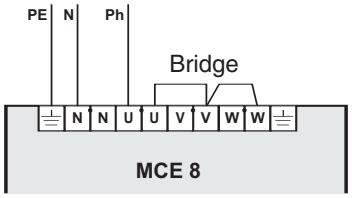

Power supply
400V / 3+N+G / 50Hz

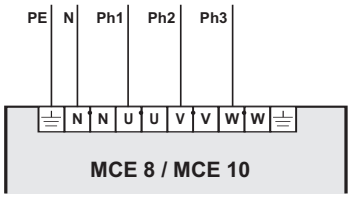

GB

4.2.2.2 - CONTROL CONNECTIONS

- Refer to the diagrams in § 4.2.3.

Caution:

To avoid problems related to electromagnetic disturbances, do not route these cables near power cables.

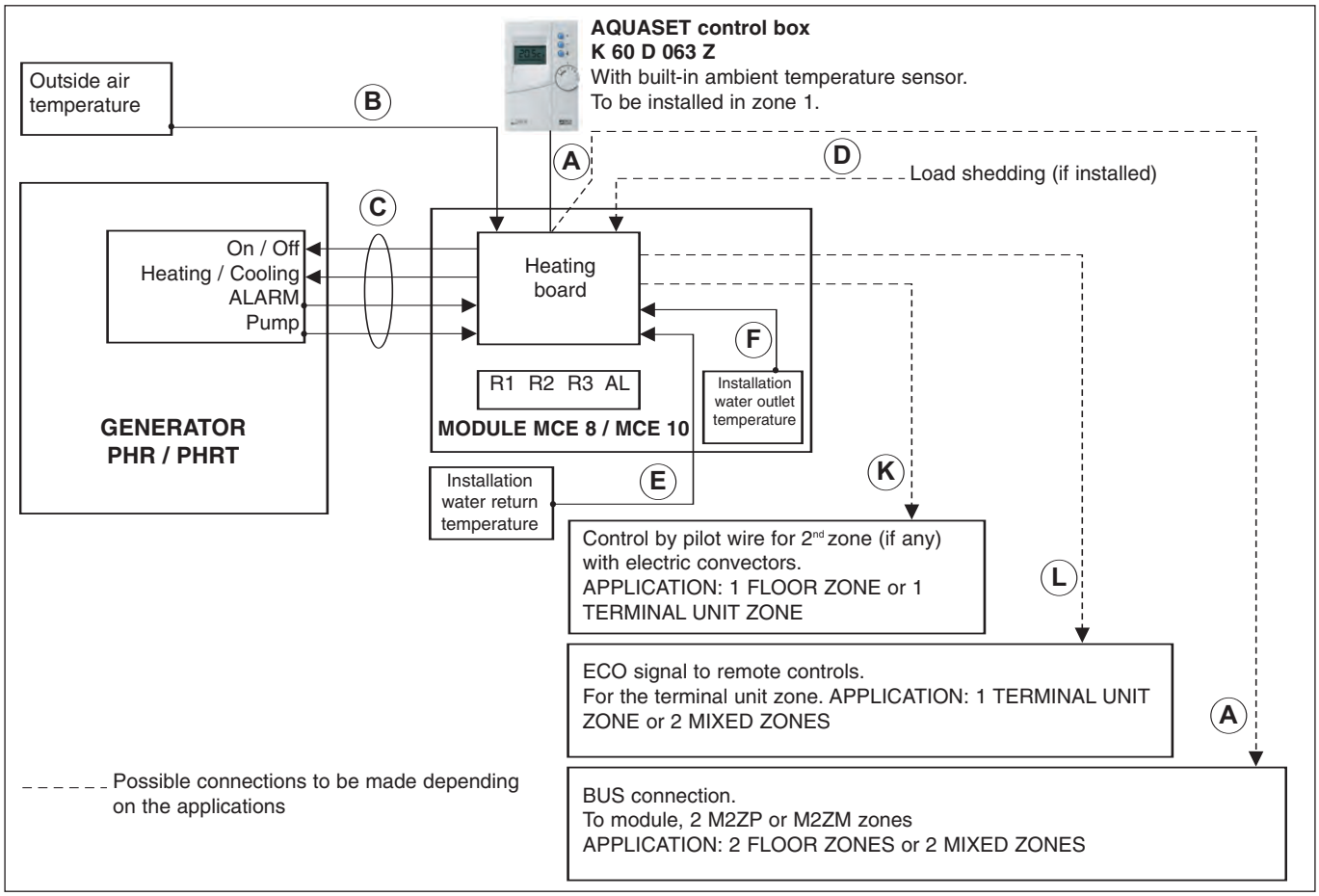

A) BUS

- 2-conductor cable, min. size 1 mm².
- **Total** length of the BUS connection: 40 meters (heating board / control box connection + heating board / zone board if any connection).

B) Outside temperature sensor

- 2-conductor cable, min. size 0.5 mm².
- Maximum length 25 meters.
- **Note**:
  This sensor must be located outside in a location that is representative of the temperature to be measured (on a wall facing North/North-west) and located away from parasitic heat sources (chimney, thermal bridge, etc..) and sheltered from inclement weather (under a roof overhand, for example).
  Connection as per paragraph 6.

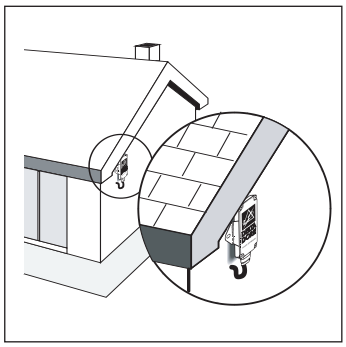

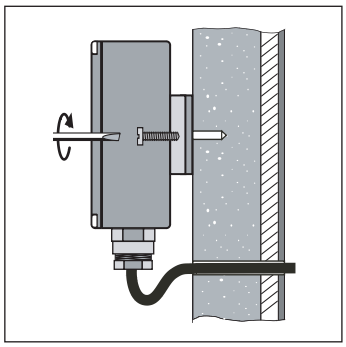

C) Generator control connection

- Shielded cable with 4 twisted pairs (shielding on generator side).
  - 1 pair for generator on.
  - 1 pair for generator heating/cooling changeover.
  - 1 pair for the generator alarm signal.
  - 1 pair for the circulating pump on signal.
- Min. cable size: 0.5 mm².
- Maximum length 25 meters.

D) Module additional heating load shedding signal (if installed)

- Two possibilities:
  1) By a "remote info" signal coming from the electrical utility meter (currently pending approval with by the EDF (French electrical utility): 1 twisted pair (6/10) cable with shielding (shielding grounded on module side).
  2) By a good quality, potential-free external contact.
  - Contact closed = load shedding of the additional electric heating.
  - 2-conductor cable, min. size 0.5mm².
  - Maximum length 25 meters.

E) Installation return water temperature sensor

- In order to ensure that this sensor works correctly:
  - Ensure that the sensor is correctly secured to the piping.
  - Use thermoconductive paste to improve conductivity (not supplied).
  - Insulate the assembly with insulating foam (not supplied).
- Two cases:

  1) Module installed on the generator.
  - The sensor, equipped with its cable (supplied with the module) is to be installed in the location provided on the generator's water inlet.
  - The cable is to be routed inside the equipment, using the cable glands provided for this purpose.

Position of the water temperature sensor on the installation return line
(generator water inlet)

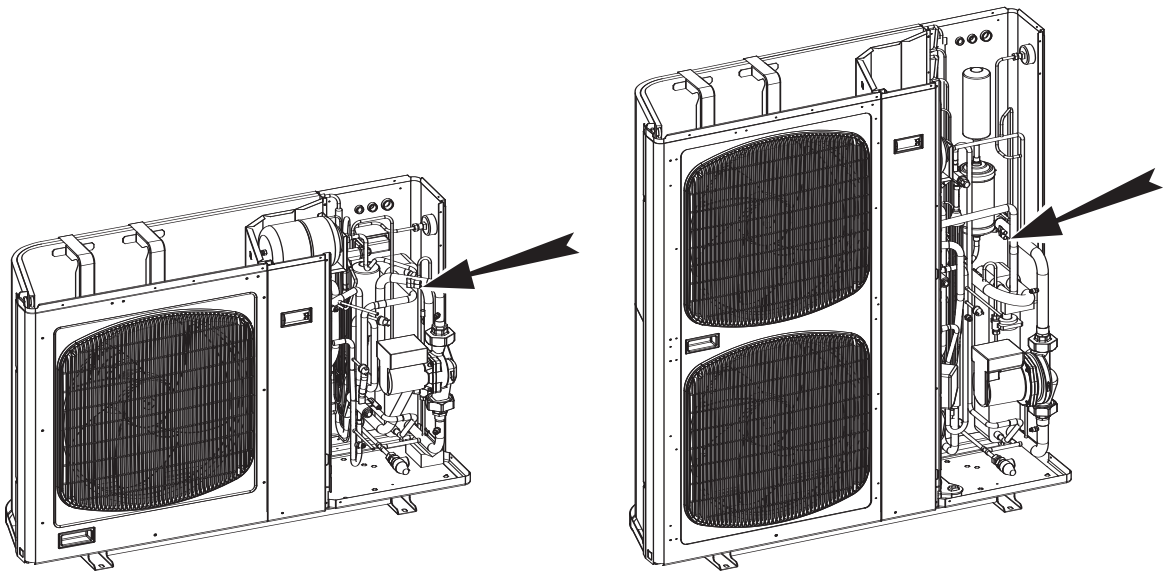

  2) Module mounted separately.
  - The sensor is placed on the installation's water return line. Used the metal clamp supplied.
  - This connection may be extended with a 2-conductor cable, min. size 0.5 mm^2 and max. length 25 meters.

F) Installation outgoing water temperature sensor

- Indicated for informational purposes, as it is already factory-connected in the module.

K) Pilot wire for electric convectors (if any)

- The pilot wire sends shut-down, "**anti-freeze**" (long term absence) or "**Economy**" mode instructions to the electric convectors in zone 2, and possibly in the case of 1 floor zone or 1 terminal unit zone applications.
  Convector control (not supplied) must be adapted to receive this type of signal (standard GIFAM 4).
  Consult the manual of the electric convectors.
- 230 VAC signal from the heating board.
- 1.5 mm^2 single-pole cable adapted for the operating voltage.
- Max. number of convectors controlled by the pilot wire: 20.
- **Note**:
  The electrical power supplied to the convectors must be the same as that of the module.

L) ECO signal for remote controls (if installed)

- In order to send reduced mode orders (Eco or standby) to the terminal unit remote control units in the case of applications such as 1 terminal unit zone or 2 mixed zones.
- In the form of a potential-free contact which can used in **VLV** (Very Low Voltage), 2A max.
- **Note**:
  The contact can control up to 10 **RCC10** (**70250051**) or **RCC20** (**70250052**) type controls.
  Consult the terminal unit and remote control documentation to connect this contact.

GB

4.2.3 - CONTROL PART CONNECTION DIAGRAMS

- The control wiring is connected to the terminal strips of the electronic board located on the control box's cover.

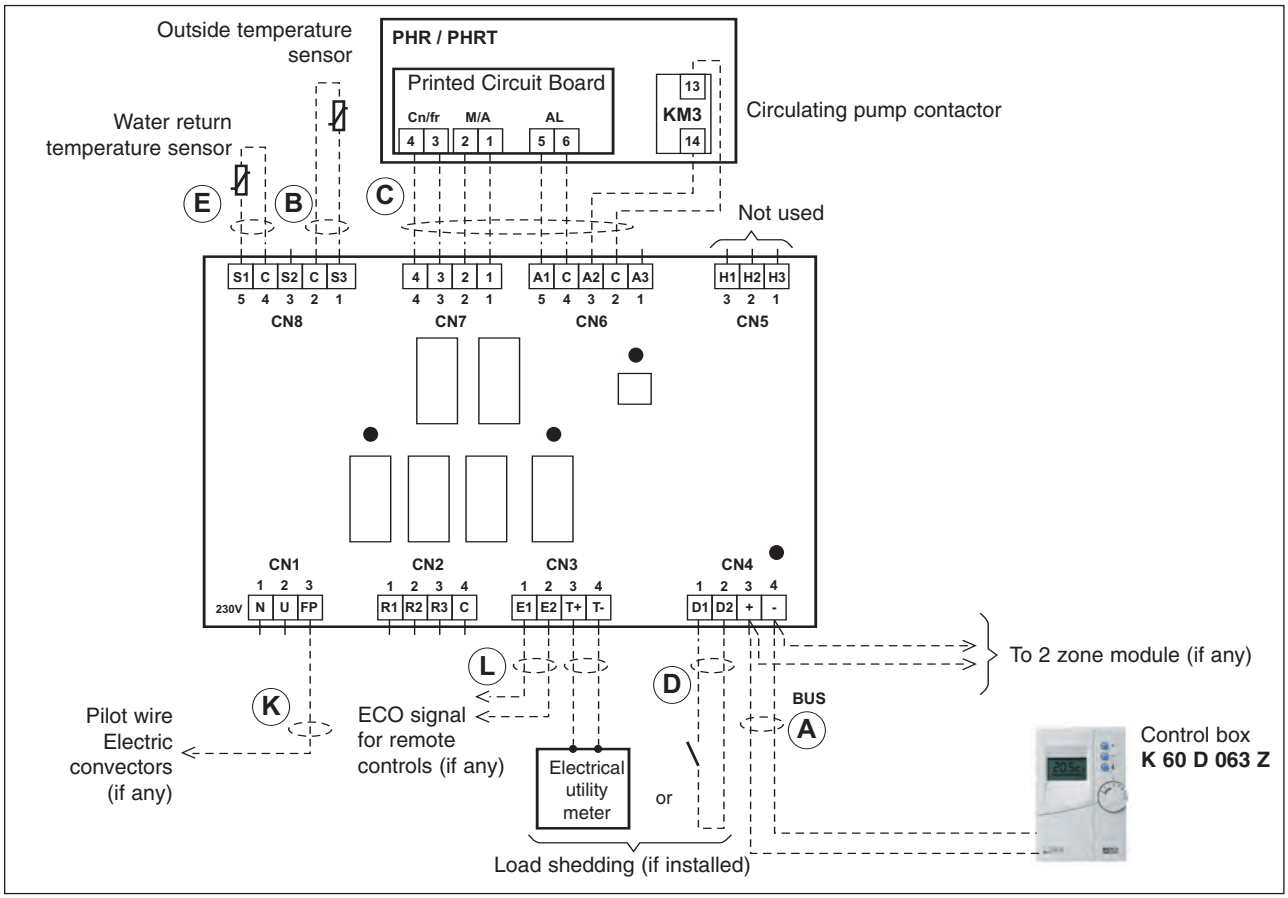

4.2.4 - CABLE ROUTING

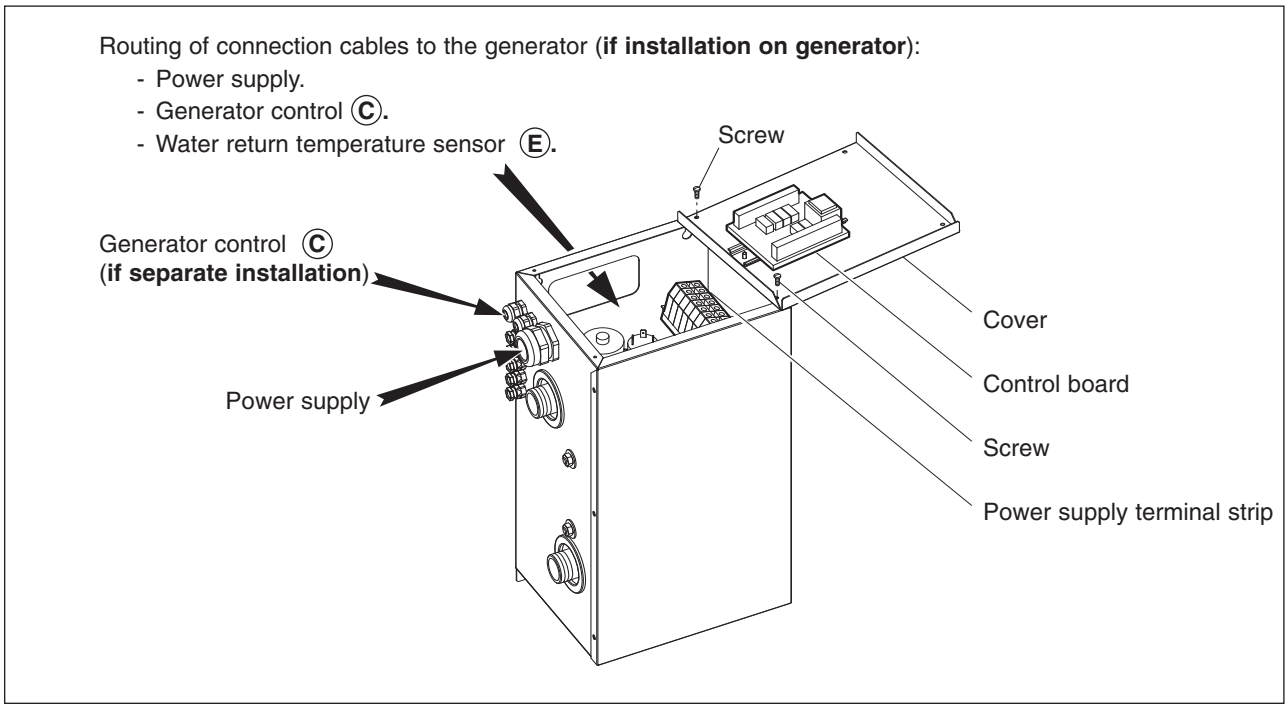

Note:
- In order to simplify the operation, the 2 retaining screws can be used to secure the cover as shown in the diagram.
- Provide a sufficient length on the installation cables to allow the cover to be removed.

Caution:

Do not pinch the wires when putting the cover back in place.

5 - MACHINE START UP

GB

IMPORTANT NOTE

Before carrying out any work on the machine, make sure that it is switched off and that access to it is prevented. Any work must be carried out by personnel qualified and authorised to work on this type of machine.

5.1 - VERIFICATIONS

- Ensure that the hydraulic connections are properly tight and that the hydraulic system operates correctly:
  - purge of circuits,
  - valve position,
  - hydraulic pressure (1.5 to 3 bar).
- No leaks.
- Proper machine stability.
- Electrical cables and wires are well secured to their connection terminals. Loose terminals can cause heat build-up on the terminal board and malfunctions.
- Ensure that the electric cables are properly protected from all sheet metal edges or metal parts that could damage them.
- Ensure that control cables and power cables are properly separated.
- Check that the unit is properly grounded.
- Make sure that no tools or any other objects have been left in the machine.

5.2 - CONFIGURATION

- Set the button on the installation's control box to OFF.
- Switch on the installation.
- Check parameters and, if required, adapt it to the type of application and according to the installation conditions.

  Parameters should be defined on the control box (refer to the control unit's installation manual).

5.3 - OPERATION

- Check that the circulator is operating in the generator.
- Check that water is properly circulating in the installation (valve position).
- Ensure that the installation is properly purged.

  CAUTION:

  An incorrect purge could result in damage to the module's heater.

- Start the system in the desired operating mode using the control box button (consult the installation manual and the control box user's guide).

5.4 - MODULE PRESSURE DROPS

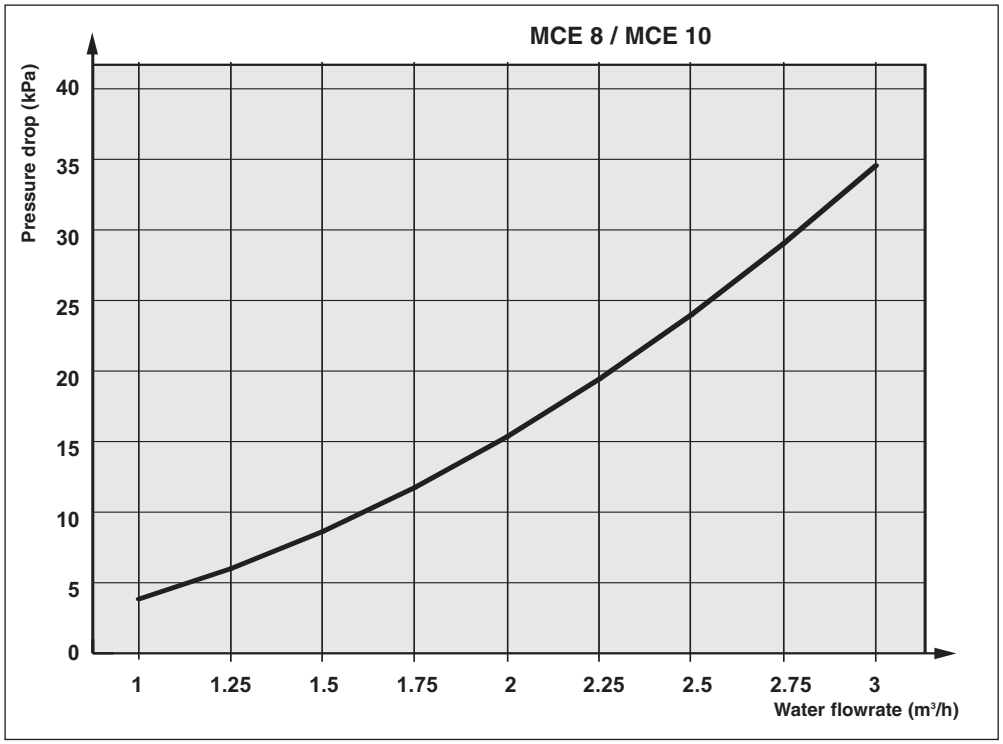

6 - MAINTENANCE INSTRUCTIONS

GB

IMPORTANT NOTE

- **Before doing any work on the installation, make sure it is switched off and <u>all power supplies locked out</u>.**
- **Any work must be carried out by personnel qualified and authorised to work on this type of machine.**

6.1 - GENERAL MAINTENANCE

All equipment must be properly maintained in order to provide optimum performance over time. Faulty maintenance can result in the cancellation of the product guaranty. Depending on the products, maintenance operations consist in the cleaning of filters (air, water), internal and external exchangers, casings, and the cleaning and protection of condensate tanks. Treating odours and the disinfection of room surfaces and volumes also contributes to the cleanliness of the air breathed by users.

- **Perform the following operations at least once per year** (the frequency of operations depends on the installation and operating conditions):
  - Check the composition and condition of the coolant.
  - Check operating points and setpoints.
  - Check the safety devices:
    - Dust the electrical box.
    - Ensure that all electrical connections are properly tight.
    - Check the ground connections.
    - Check the hydraulic system (cleaning of the filter, water quality, purge, pressure etc.).

6.2 - HEATER SAFETY

- The module's heater is equipped with an automatic-reset and a manual-reset safety thermostat.
- These thermostats trip in case of excessive temperature on the heater wall.
- Possible causes:
  - Excessively low or inexistent water flowrate.
  - Improperly purged water system.
- If the manual thermostat trips, correct the fault then reset the thermostat as follows:
  - **<u>Turn off and lock out the unit</u>.**
  - Remove the box's cover.
  - The thermostat are located against the wall of the heater.
  - Press the button in the centre of the manual thermostat.

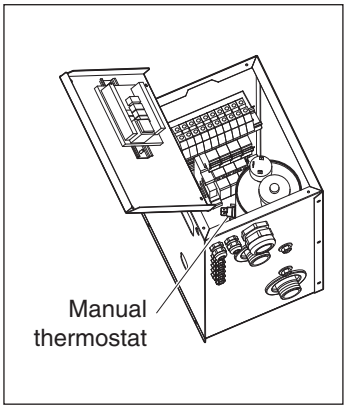

6.3 - PROTECTION OF HEATER CIRCUITS

- The heater features three heating elements each supplied with 230 V between phases and neutral. Each of these circuits is protected by a modular circuit breaker (Q1, Q2, Q3) mounted on the panel.
- Circuit breaker Q4 supplies the module’s control circuit.
- If tripped:
  - **<u>Turn off and lock out the unit</u>.**
  - Correct the fault.
  - Reset the circuit breaker.

6.4 - ELECTRIC PANEL REMOVAL

- If an electric component must be replaced (circuit breaker, relay...), the electric panel must be removed.
- Remove the 2 mounting screws and remove the panel as shown.
- To put the panel back in place, fit the end in the slide at the back of the box and replace the screws.

  Caution:

  Do not pinch the wires under the panel.

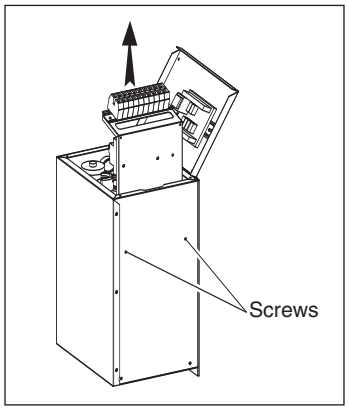

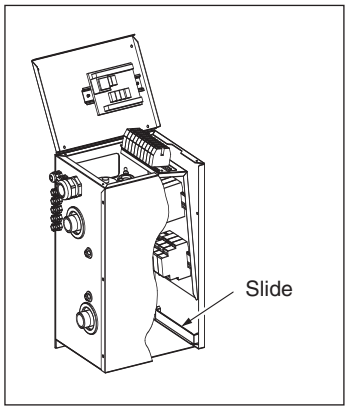

7 - ELECTRICAL DIAGRAMS

GB

Component symbols

A1	Control board	**Q2**	Heating element circuit breaker
E1	Water pressostat	**Q3**	Heating element circuit breaker
F1	Automatic safety thermostat	**Q4**	Control circuit circuit breaker
F2	Manual safety thermostat	**R1**	Heating element
KA1	Fault relay	**R2**	Heating element
KM1	Heating element contactor	**R3**	Heating element
KM2	Heating element contactor	**S1**	Installation return water temperature sensor
KM3	Heating element contactor	**S2**	Installation return water temperature sensor
Q1	Heating element circuit breaker	**S3**	Outside temperature sensor

ELECTRICAL DIAGRAM - MCE 8 / MCE 10

10 05 806 - 01

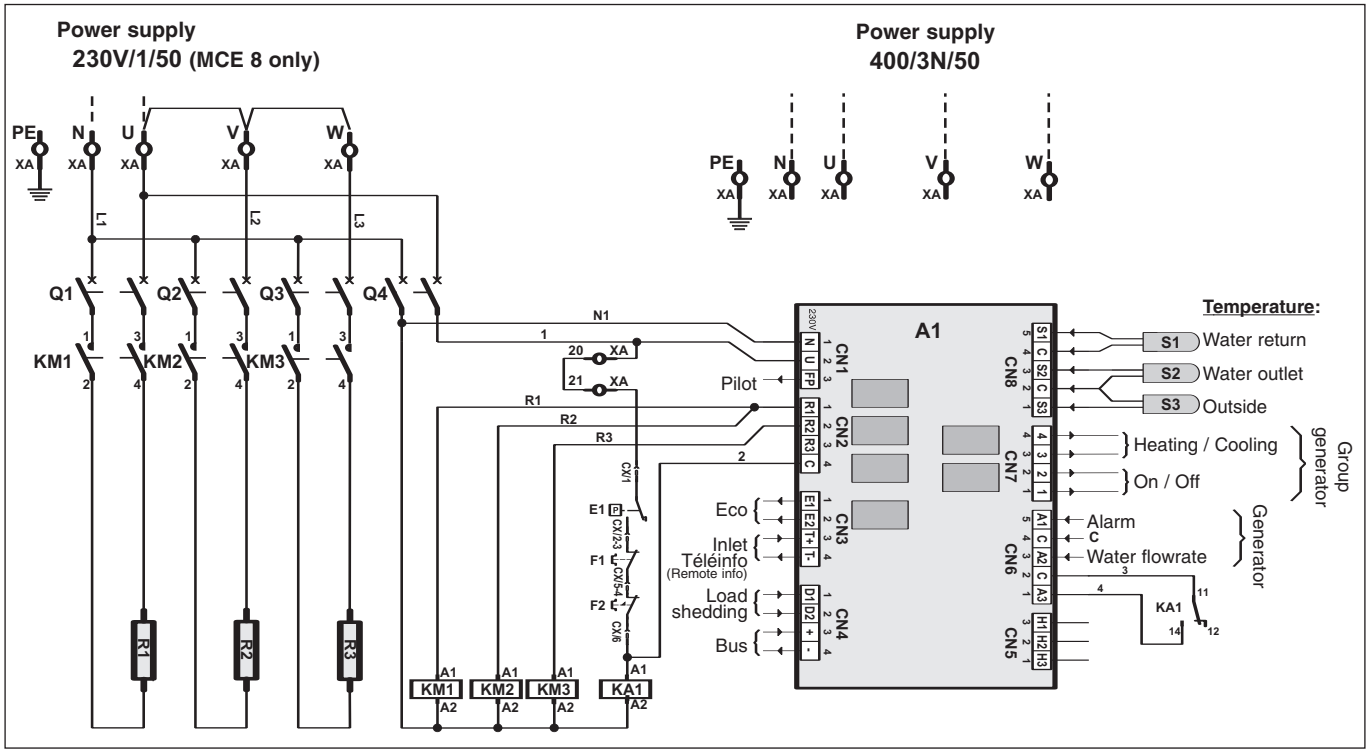

F

GB

I

E

D

Par souci d'amélioration constante, nos produits peuvent être modifiés sans préavis.
Due to our policy of continuous development, our products are liable to modification without notice.
Per garantire un costante miglioramento dei nostri prodotti, ci riserviamo di modificarli senza preaviso.
En el interés de mejoras constantes, nuestros productos pueden modificarse sin aviso prévio.
Unsere Produkte werden laufend verbessert und können ohne Vorankündigung abgeändert werden.

Technibel
R.D. 28 Reyrieux BP 131 01601 Trévoux CEDEX France
Tél. 04 74 00 92 92 - Fax 04 74 00 42 00
Tel. 33 4 74 00 92 92 - Fax 33 4 74 00 42 00
R.C.S. Bourg-en-Bresse B 759 200 728